Operation Manual

Predator SS

SIMPLIFIED STRETCH

LOW PROFILE

SERIAL NUMBER

Please refer to the serial number in all correspondence with Highlight or any Highlight Distributor. This identifies your machine and will help in our ability to quickly and efficiently respond to your needs.

OPERATION MANUAL NUMBER: PREDSS_LP / DEC-2017

HIGHLIGHT INDUSTRIES, INC.
2694 Prairie St SW • Grand Rapids, MI 49519
(616) 531-2464 • (800) 531-2465 • fax (616) 531-0506
highlightindustries.com • info@highlightindustries.com

Table of Contents

Table of Contents 1
Table of Figures 2
General Information 3
Safety Messages 4
Introduction and Warranty 6
Revision History 8
Specifications 9
Specifications 10
System Overview Prints 11
System Description 12
Installation & Adjustments 13
Machine Placement 14
Machine Set-Up 15
Microprocessor Card 18
Optional Scale Package 20
Operation Instructions 23
Operator Controls 24
Film Loading 27
Machine Operating Instructions 29
Maintenance 30
Preventative Maintenance 31
Maintenance Schedule 34
Trouble-shooting 35
Self Test Troubleshooting 36
Troubleshooting Guide 39
Power Problems 40
Turntable Problems 41
Film Carriage Problems 42
Technical References 43
Recommended Spare Parts 44
Electrical Drawings 45
Mechanical Drawings 50
Notes 64

Table of Figures

Figure 1: Predator SS Low Profile Overview Layout 11
Figure 2: Predator SS Low Profile Machine Description..... 12
Figure 3: Bracket in the Shipping Position..... 16
Figure 4: Bracket in its Operating Position 16
Figure 5: Microprocessor Card for the Predator SS 18
Figure 6: Operator Controls Diagram for the Predator SS..... 24
Figure 7: Film Loading/Threading Diagram 27
Figure 8: Turntable Belt Adjustment..... 32
Figure 9: Film Carriage Lift Chain Adjustment..... 33
Figure 10: Self Test Error Display 37

1

Highlight Industries, Inc.

Predator SS Turntable Stretch Wrapper Operation Manual

General Information

Safety Messages

For the best result with the Predator Turntable Stretch Wrapper, carefully read this manual and all of the warning labels attached to the equipment before installing and operating it, and follow instructions exactly. Keep this manual for machine reference.

Definitions and Symbols

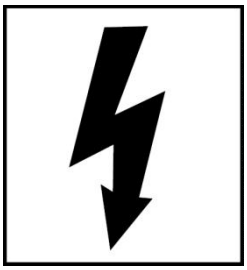

High Voltage!
This symbol indicates high voltage. It calls your attention to items or operations that could be dangerous to you or other persons operating the equipment. Read the message and follow the instructions carefully.

Warning!
This symbol indicates a potentially hazardous situation which, if not avoided, can result to bodily injury, or serious damage to the product.

Notes
This symbol indicates an area or subject of special merit, emphasizing the equipment's capabilities, common errors in operation or maintenance, or other special instructions that can provide benefits to users.

General Precautions – Read These First!

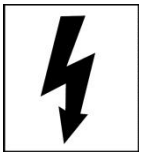

High Voltage!
Disconnect AC input power before checking components, performing maintenance, cleaning up, and when the machine is not in use. Do NOT connect or disconnect wires and connectors while power is applied to circuit.

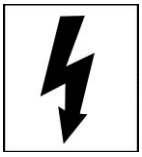

High Voltage!
Wiring work should be carried out only by qualified personnel. Otherwise, there is a danger of electric shock or fire.

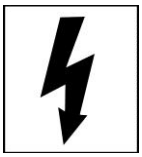

High Voltage!
The user is responsible for conforming to all applicable code requirements with respect to grounding all requirements. Do NOT use extension cords to operate the equipment.

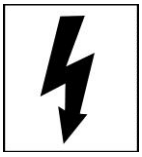

High Voltage!
Motor control equipment and electronic controllers are connected to hazardous line voltages. When servicing drives and controllers, there may be exposed components with housings or protrusions at or above line potential. Extreme care should be taken to protect against shock.

Warning!
Loose clothing must NOT be worn while the machine is in operation. Stay clear of moving parts while the machine is running.

Introduction and Warranty

Introduction

Thank you for your purchase of a *Predator SS* Turntable Stretch Wrapper! Designed for the high volume industrial user the Predator SS will stretch wrap any load to the maximum stretch level of any film with full independent control of the film force. This allows even light unstable loads to be wrapped at the lowest possible cost and the maximum load holding force.

Limited Warranty

Highlight Industries, Inc. warrants its Predator manufactured by it, and sold pursuant to this order, will be of merchantable quality, free from defects in material and workmanship as determined at the date of shipment, by generally recognized, applicable and accepted practices and procedures in the industry, for a period of three (3) years from the Highlight invoice date, under normal use and service.

When the Purchaser gives Highlight written notice of any alleged defect within the applicable warranty period, Highlight will, at its option repair or replace the same free of charge F.O.B. its manufacturing plant, installation not included. Equipment replaced under the warranty shall have the same warranty as new equipment but does not extend the warranty of the original equipment.

Satisfaction of this warranty, consistent with other provisions herein, will be limited to the replacement or repair or modification of, or issuance of a credit for, the equipment involved, at Highlight's option.

Highlight neither assumes nor authorizes any person to assume for it any other obligation in connection with the sale of Highlight's equipment.

This warranty shall not apply to any equipment which has been repaired or altered by un-authorized personnel in any way so as to, in the judgment of Highlight, affect serviceability, or which has been subjected to misuse, negligence, accident, or to equipment made by Highlight which has been operated in a manner contrary to Highlight's instructions.

In no event regardless of the cause, shall Highlight be liable for penalties or penalty clauses of any description or any damages resulting from loss of profits, use of products or for any incidental indirect or consequential damages, even if advised of the possibility of such damages. This limitation of Highlight's liability will apply regardless of the form of action, whether in contract or tort, including negligence. Any action against Highlight must be brought within twelve (12) months after cause of action accrues.

"This warranty in lieu of all other warranties whether expressed, implied or statutory including implied warranties of merchantability of fitness or extends only to the buyer or customer purchasing from Highlight Industries, Inc or an authorized distributor."

About This Document

The purpose of this manual is to provide you with information necessary to install, operate, troubleshoot, and maintain the Predator SS Turntable Stretch Wrapper. The audience for this manual should have basic knowledge of mechanical and electronic components, standard electrical wiring practices, and schematics symbols.

To guarantee safe operation of the equipment, carefully observe the safety messages throughout this manual. Keep this operating manual and distribute it to all users for reference.

Application Assistance

If any assistance is desired, contact the distributor from whom you have purchased the unit, or call the number listed on the bottom of each page of this manual. To receive quick and proper technical support for the equipment you have purchased, please be prepared to provide the following information:

1. Machine Serial Number
2. Date of Purchase
3. Symptoms of any problems

Revision History

Revision	Revision Comment	Date of Revision
	Initial Release	October 2014
	Updated load cell part number	Feb 2015-RDU
	Updated 110” part numbers	April 2015-RDU
	Added summing board cover to scale TT	Jan 2018-RDU

2

Highlight Industries, Inc.

Predator SS Turntable Stretch Wrapper Operation Manual

Specifications

Specifications

Machine Dimensions

LOW PROFILE	80” Wrap Height	110” Wrap Height
Length (inch)	98	98
Width (inch)	60	60
Height (inch)	91	132
Turntable Diameter (inch)	60	60
Turntable Height from Floor (inch)	3.25	3.25
Operation Space (inch)	105 x 75 x 120	105 x 75 x 132
Maximum Pallet Size (inch)	52 x 52 x 80	52 x 52 x 110
Shipping Weight (lbs)	1500	1700

Electrical Specifications

- 120VAC, 60Hz, Single Phase, 15Amp

Turntable

- 4,000 lbs Maximum Turntable Load Capacity
- 12 RPM Maximum Turntable Speed
- 20-30 Loads Per Hour
- Optional Integrated Scale

Film Carriage

- Adjustable Raise and Lower Speeds
- Automatic Package Height Detection

Film Delivery

- Infinite/Manual Film Force Adjustment
- 10 Inch Diameter Roll Capacity
- 20 Inch Height Roll Capacity (30 Inch Optional)

System Overview Prints

Note
Shown below are STANDARD assembly drawings. It may not reflect your purchased system, especially when optional items are added. Refer to the Technical References section of the manual for more detailed information.

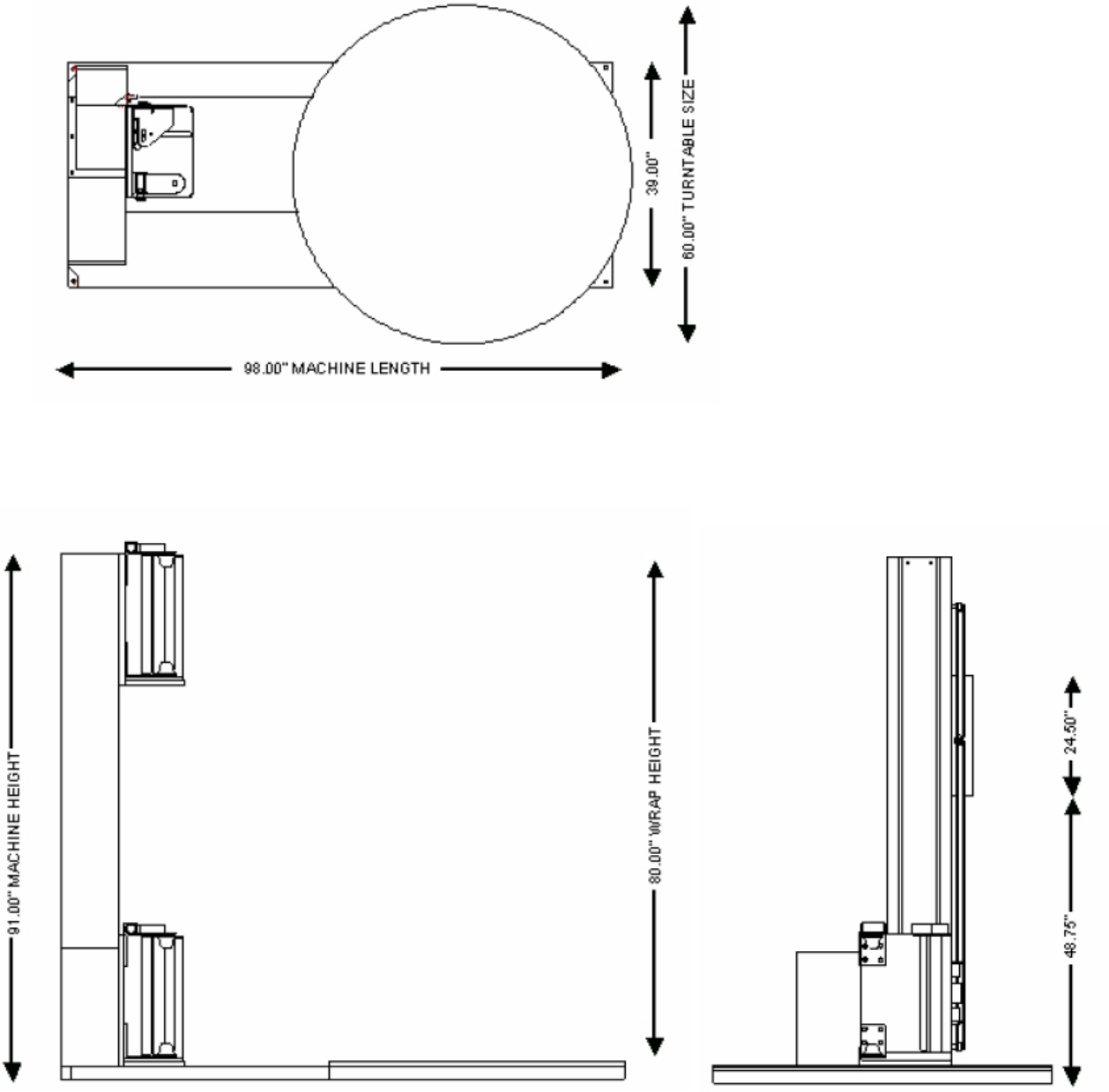

Figure 1: Predator SS Low Profile Overview Layout

System Description

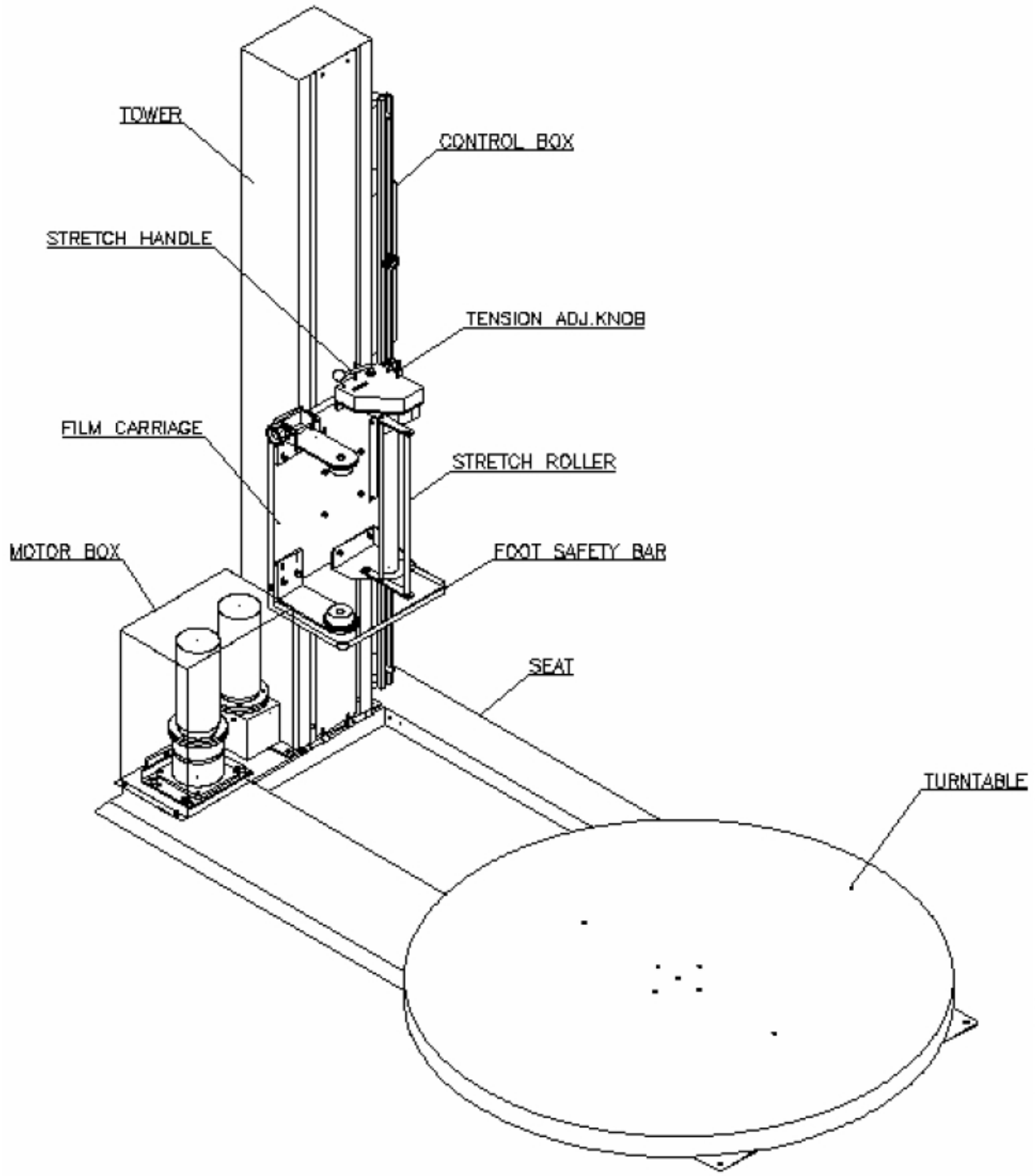

Figure 2: Predator SS Low Profile Machine Description

3

Highlight Industries, Inc.

Predator SS Turntable Stretch Wrapper Operation Manual

Installation & Adjustments

Machine Placement

Receiving and Inspections

The Predator Turntable Stretch Wrapper has gone through quality control tests at the factory before shipment. Upon receiving, please do the following:

1. Inspect the entire machine for visual damage during shipment. If found, immediately report this damage to the trucking line. *Highlight Industries, Inc.* has taken every precaution during the packaging and loading of this equipment, however, it is YOUR RESPONSIBILITY to inspect for damage before installation.

2. Make sure the part or serial number indicated on the machine corresponds with the part number of your order.

Positioning of the Machine

Place the Predator Turntable Stretch Wrapper close to an area where you will be wrapping your loads. Make sure that there is sufficient room to load/unload the machine and that you do not stretch the power cable. Remember, you will need to plug the machine in to a 120VAC, 15-Amp outlet.

Floor Weight Bearing/Stress Tolerance

The floor must be able to bear the weight of the machine, the weight of the maximum load, plus a safety factor. The floor must also be able to tolerate the stress of the machine's operation. If the fork trucks will operate on the same weight bearing area, add the weight of the trucks to the weight bearing stress tolerance requirements.

The Predator can be installed on any type of floor constructions that meets the weight bearing and stress tolerance requirements.

Warning!
The Predator must be anchored securely to the floor, using the type of anchor recommended for your floor.

Machine Set-Up

Unpacking and Moving the Machine

It is very important to read all instructions before undertaking any of these steps. The following steps should help achieving a safe and quick machine set-up.

1. Place the skidded machine close to the designated wrap area. Remove all shipping fasteners holding the machine to the pallet. The machine may be crated with the tower tilted down with the motor cover and carriage removed for shipping purposes.

1.1. Stand up tower, pivoting about the pivot bracket at the base of the tower. Once upright align 5 bolts at tower base to frame and tighten.
1.2. Remove 4 lower bolts from carriage mount bracket – leave the top 2 bolts loose but in place. Align keyholes on carriage back over top 2 bolts in carriage mount bracket and hang carriage. Install and tighten all 6 mounting bolts.
1.3. The carriage photo eye bracket may need to be unbolted from its shipping position (Figure 3) to its operating position (Figure 4).
1.4. Mount motor cover in place over turntable and carriage lift motors with provided fasteners.
1.5. Re-connect wiring to carriage if removed for shipping.

2. Place the forks of the forklift through the tubes provided on the base of the machine, remove the machine from the shipping skids, and place it in the designated wrap area.

3. If the <u>OPTIONAL</u> ramp (Part Number #600086) is purchased:
   Select a ramp position as illustrated below. The ramp can be positioned anywhere in a 180° rotation around the front of the turntable. There should be ¼” gap between the turntable and the ramp. The ramp should be fully supported by the floor. Both the ramp and the machine should be lagged to the floor.

Figure 3: Bracket in the Shipping Position

Figure 4: Bracket in its Operating Position

Warning!
It is very important that the machine be leveled. Uneven floors will cause premature turntable support roller failure.

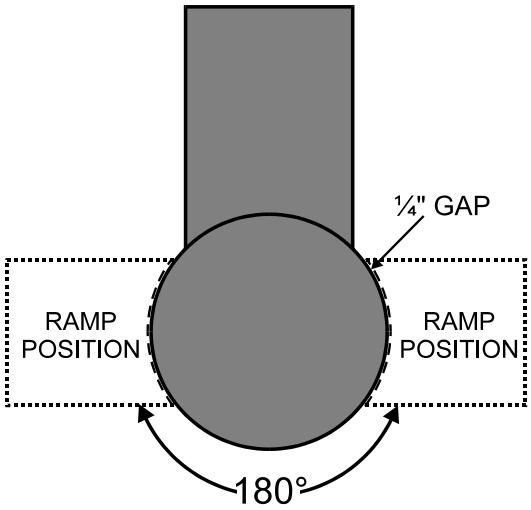

Figure 5: Ramp Position for the Predator SS Low Profile

Power and Control Wiring Checks

1. Using a volt meter, check the AC voltage coming to the machine and insure the proper voltage is present.

2. Make sure the Emergency Stop button on the operator panel is fully pressed in. Turn the disconnect switch to the ON position. Power should be applied to the drive board, operating touch-panel, photoelectric sensors, switches, and LED's.

3. Press the Emergency Stop button. Make sure all machine power is completely removed when the Emergency Stop button is depressed. Pull the Emergency Stop button out to resume.

4. Open the electric control box. Make sure all machine power is completely removed when the electrical control box is open. Close the electrical control box to resume.

5. Trip the carriage foot security bar. Make sure all machine power is completely removed when the carriage foot security bar is tripped. Clear the bar to resume.

Warning!
Ensure that the Emergency Stop button light is ON when the button is pushed in and OFF when the button is pulled out.

Microprocessor Card

Microprocessor Card Description

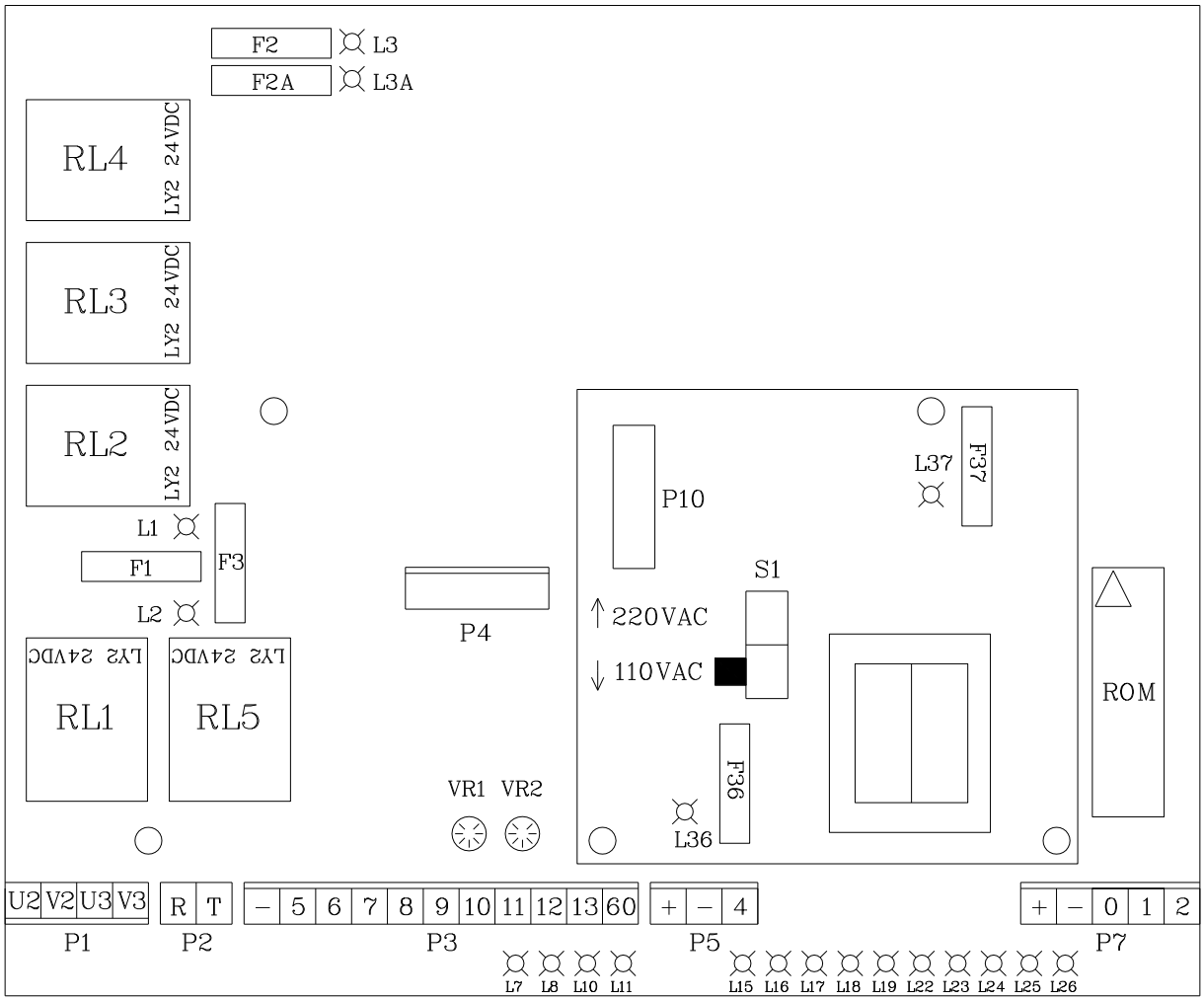

Figure 5: Microprocessor Card for the Predator SS

S1:	Operating voltage selector (220 VAC or 110 VAC)
Connector P1:	Turntable/Film Carriage Relay Output
Connector P2:	Power Input
Connector P3:	Operator Panel Input
Connector P4/P10:	Transformer Input/Output
Connector P5:	Turntable Proximity Sensor Input
Connector P7:	Film Carriage Limit Switches Input
Relay 1:	Film Carriage Down
Relay 2:	Film Carriage Up

Relay 3:	Turntable/Film Carriage Stop
Relay 4:	Power Input
Relay 5:	Turntable Running
Fuse 1:	Carriage Motor (5 Amp)
Fuse 2/2A:	Power Input (10 Amp)
Fuse 3:	Turntable Motor (5 Amp)
Fuse 6:	Transformer Input (1 Amp)
Fuse 7:	Transformer Output (1 Amp)
LED 1 is ON:	Film Carriage Motor fuse is blown
LED 2 is ON:	Turntable Motor fuse is blown
LED 3/3A is ON:	Power Input fuse is blown
LED 7 is ON:	Cycle starts
LED 8 is ON:	Film Carriage is moving up
LED 10 is ON:	Film Carriage is moving down
LED 11 is ON:	Turntable is rotating
LED 15 is ON:	Start Button is pushed
LED 16 is ON:	Pause Button is pushed
LED 19 is ON:	Package Height Photo Sensor is unblocked
LED 23 is ON:	Carriage Max Up Limit Switch is not tripped
LED 24 is ON:	Carriage Max Down Limit Switch is tripped
LED 25 is ON:	Emergency Stop Button is not pushed
LED 26 is ON:	Turntable Home/Count proximity switch is blocked
LED 36 is ON:	Transformer Input/Output is blown
VR1:	Film Carriage Max Speed setting
VR2:	Turntable Max Speed setting

Replacing Microprocessor Card

1. Turn the disconnect switch to **OFF** position.

2. Removed the old microprocessor card by pulling all connectors off and loosening the four mounting screws.

3. Install the new microprocessor card; connect all connectors and tighten the mounting screws.

4. Turn the disconnect switch to **ON** position. The display should show “- -“. If not, check all connectors and fuses again.

Optional Scale Package

The optional scale package allows the user to quickly measure the weight of the package placed on the machine. To operate correctly and efficiently the scale needs to be configured with the correct settings. Below are the instructions on how to re-configure the scale and the settings that have been pre-programmed. Re-configuring the scale is not required unless there is a problem with the existing scale or a new scale is added to the machine. Refer to the scale manual for more information.

Note
Changing the scale parameters to values other than the Highlight recommended values may result in poor scale operation.

Navigating the Scale Menu

Step 1: Turn the scale display over so you are looking from above down at the back side of the scale and turn off the scale power.

Step 2: Remove the two small screws holding a small plate on the back of the scale.

Step 3: Looking down at the scale, move the switch under the plate to the right.

Step 4: Turn the scale power back on.

Step 5: Press the “PRINT / >>” button until the desired setting appears on the screen.

Step 6: Press the “ZERO” button to enter the parameter set-up.

Step 7: Press the “PRINT / >>” button until the display reads the correct setting and press the “SET / NET” button.

Step 8: Turn the power back off, move the switch under the plate to the left, and turn the power back on.

Step 9: Replace the screws on the back cover and retighten the scale swivel grips on the side.

Step 10: The scale is now ready to use.

Highlight Recommended Configuration Values:

Note
Changing the scale parameters to values other than the Highlight recommended values may result in poor scale operation.

Name/Code	Description	Highlight Recommended Value
F1: Graduations	Specifies the number of full-scale graduations. Value should be consistent with legal requirements and environmental limits on the useful system resolution.	5000
F2: Span Gain	Span Gain is related to A/D integration time. The larger the span gain, the higher the internal resolution, but the slower the update speed. Note that the scale must be re-calibrated whenever this parameter is altered. See Appendix C in the scales manual for more information.	100
F3: Zero Track Band	Selects the range within which the scale will automatically zero. Note that the scale must be in a standstill to zero the scale.	3
F4: Zero Range	Selects the range within which the scale may be zeroed. Note that the indicator must be in standstill to zero the scale.	100
F5: Motion Band	Sets the level at which motion is detected by comparing the present display update with the previous one. If motion is not detected for two seconds or more, scale is in standstill and can process a Print or Zero command. Maximum value varies depending on local regulations	1
F6: Digital Filter	Averages weight readings to produce higher stability but the slower the indicator's response time. Choose 8 unless a very fast response is needed.	8
F7: Overload Limit	Selects the desired formula which determines the point at which the indicator shows overload. All selections are based on the primary unit selected in F8.	2%
F8: Calibration Unit	Selects the primary base unit to be used in the calibration process. Also the default unit for normal operation. 1 = pounds, 2 = kilograms.	1
F9: Display Divisions	Determines the desired weight increments. Value should be consistent with legal requirements.	1
F10: Decimal Point	Determines the location of the decimal point.	0
F16: Zero Calibration	Places the scale in a Zero Calibration routine.	See below.
F17: Span Calibration	Places the scale in a Span Calibration routine. See below.	See below.

Scale Calibration Procedure

Note
Highlight Industries, Inc calibrates the scale before shipment using known weights. The values stored in theses settings are custom per scale and machine. Do not change these values unless directed to do so by Highlight personnel.

Step 1: Navigate the scale menu to parameter “F 16.”

Step 2: Press the “ZERO” button ONCE. This enters the Zero Calibration Menu. The display will momentarily show “C 0” followed by a value.

Step 3: After making sure that there are no test weights on the machine press the “ZERO” button again. The display will zero.

Step 4: Press the “SET / NET” button to save the zero point value. The display will show “EndC0” momentarily then revert to parameter F16.

Step 5: Navigate to parameter “F 17.”

Step 6: Press the “ZERO” button ONCE. This enters the Span Calibration Menu. The display will momentarily show “C 1” followed by a value with one flashing digit. This value will be zero with the decimal point parameter selected in F10.

Step 7: Place a known weight on the machine. Ensure that the test weight is below the maximum capacity of the scale and above 1% of the maximum capacity of the scale.

Step 8: Key in the weight of the test weight using the buttons on the screen. Press the “TARE / <<” button to select the digit to the left of the current position. Press “PRINT / >>” to select the digit to the right of the current position. Press “UNITS” to increase the value of the digit and press “ZERO” to decrease the value of a digit.

Step 9: Once the weight of the test weight is keyed in exactly, press the “SET / NET” button to save the value. If the calibration was successful the display will read “EndC1” momentarily, and then revert back to “F17”. If “Err0” is displayed the test weight is larger than the full capacity of the scale. If “Err1” is displayed the test weight is below 1% of the full capacity of the scale. If “Err2” is displayed the internal resolution of the scale is not high enough to accept the calibration value.

4

Highlight Industries, Inc.

Predator SS Turntable Stretch Wrapper Operation Manual

Operation Instructions

Operator Controls

The operator panel for the Predator SS is shown and described as follows:

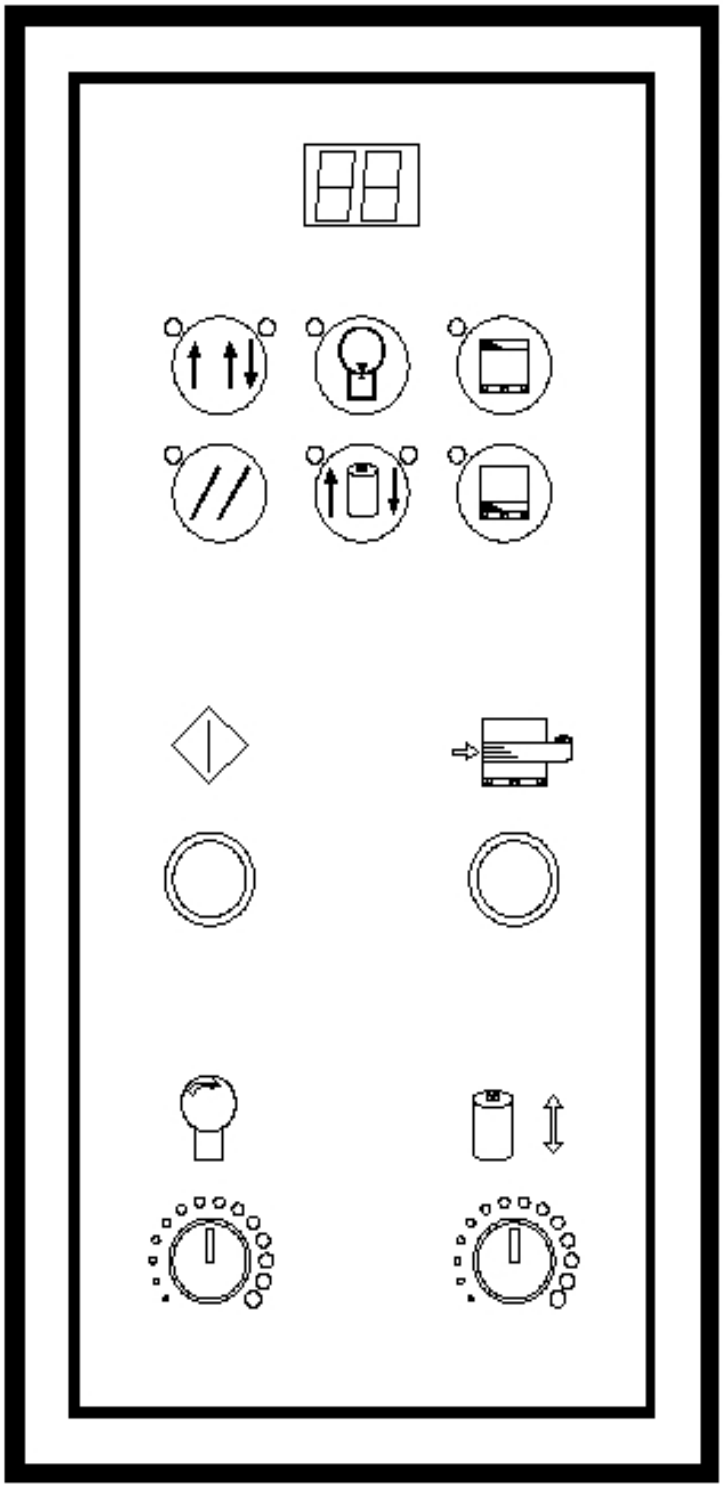

Figure 6: Operator Controls Diagram for the Predator SS

	FUNCTION
	This displays the system information: EO = Emergency Stop condition - - = System is normal - - Blinking = PWS is bad or both carriage up and down are on A = Mode A is selected B = Mode B is selected CO = Continue operation by pushing **START** button S = System is in Manual
	This displays the selected wrapping mode: *Mode A* = The LED light on the button's upper left is on. In Mode A, the bottom wrap is applied first, and then the top wrap follows. The film carriage comes down to its home position after wrapping cycle is finished. *Mode B* = The LED light on the button's upper right is on. In Mode B, after a bottom to top wrapping is completed, the carriage stays on the top. The **START** button flashes at this point. To resume the operation, push **START**. When the carriage reaches the bottom, the **START** button goes off. Push **START** button again to begin a new cycle.
	The **TURNTABLE JOG** button allows you to manually operate the turntable. When this button is pushed, the light on the button's upper left is on. Push **START** button to run the table. Pushing the button again will stop the turntable, and the light will turn off. This button may be used in conjunction with the **CARRIAGE JOG** button.
	The **CARRIAGE JOG** button allows you to manually operate the carriage. When this button is pushed, one of the lights on the button's upper right or left is on. The upper left light indicates that the carriage will go up when the **START** button is pushed. Conversely, the upper right light indicates the carriage will go down when the **START** button is pushed. To pause the operation, simply push this button again. Both indicator lights will go off. This button may be used in conjunction with the **TURNTABLE JOG** button.
	Push this **RESET** button, followed by a **START** button, to reset the system. The turntable will return to its home position, and the carriage will lower all the down.
	Push this **TOP WRAPS** button to select the number of top wraps desired (0 to 9).

	Push this **BOTTOM WRAPS** button to select the number of bottom wraps desired (0 to 9).
	Turn the **CARRIAGE SPEED** adjustment knob clockwise to increase, and counterclockwise to decrease the carriage speed.
	Turn the **TURNTABLE SPEED** adjustment knob clockwise to increase, and counterclockwise to decrease the turntable speed.
	The **BANDING** button is used for applying multi-layer reinforcing wraps in automatic or manual mode. Push and hold this button: the carriage will stop raising/lowering. When released, the carriage will resume its movement.
	The **EMERGENCY STOP** button stops the turntable in the event of emergency. This will *NOT* stop the turntable instantly. The turntable will coast to a stop, depending on the load's weight, after this button is pushed.
	This switches the main power ON or OFF.

WARNING!
The FOOT SAFETY BAR, located underneath the film carriage, works only when the machine is ON. When the bar is activated, the main power will shut OFF. Releasing the bar will re-activate the main power. Push START button to resume the operation.

Film Loading

Follow the procedure below to thread the film onto the Film Carriage.

Warning!
Be sure the Emergency Stop button is pressed before threading the film and while the film is being threaded.

1. Place the film on the film mandrel.

2. Set the Stretch Handel to the **OFF** position to release the tension. (See figure below)

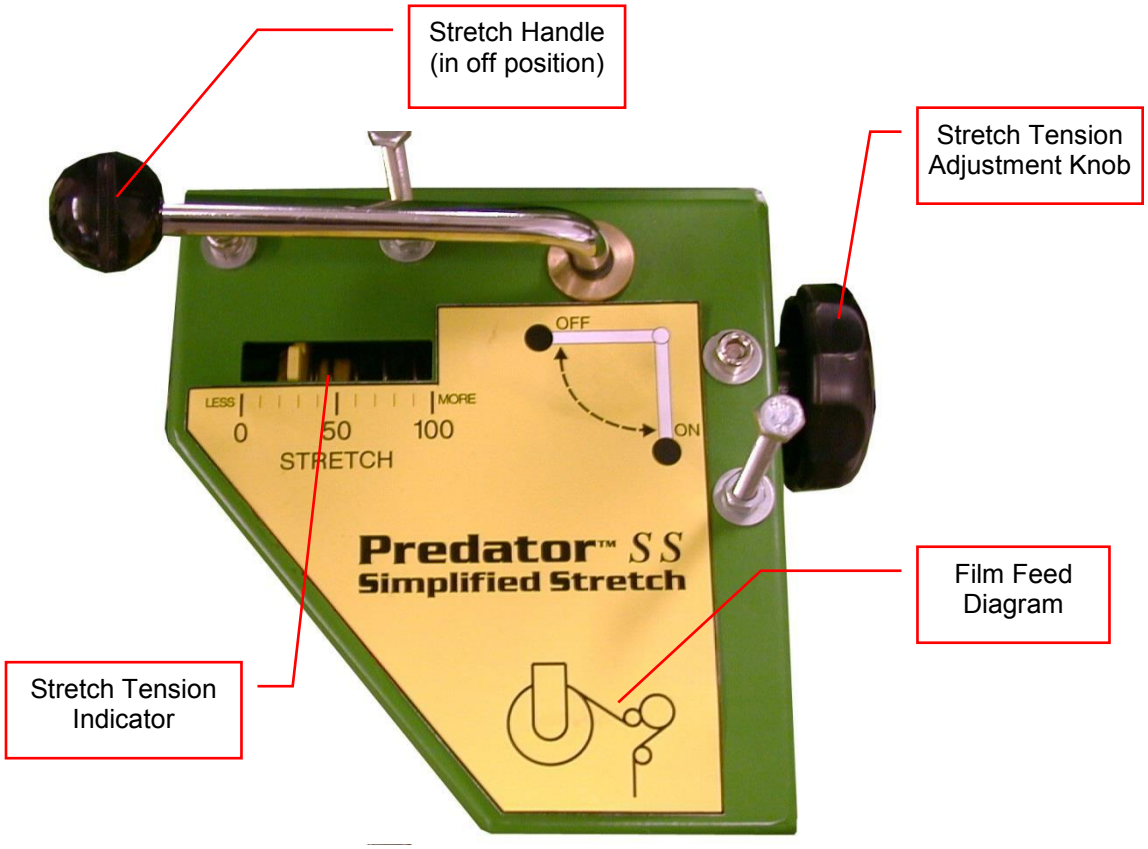

Figure 7: Film Loading/Threading Diagram

3. Follow the *Film Feed Diagram* and thread the 6-foot film tail ALL THE WAY though the rollers.

4. After threading, rotate the Stretch Tension Knob clockwise to increase film tension; or counterclockwise to decrease film tension.

5. Attach the film securely to the pallet. Tying the end of the film in a knot often helps secure the film to the pallet.

Note
The Stretch Tension numbers (0 to 100) DO NOT indicate the stretch percentage of your film. The numbers are used for reference only.

Machine Operating Instructions

Normal System Start-Up

After the machine has been positioned and supplied with proper voltage, you are ready to begin operating. Read thoroughly and follow these steps to operate your system:

1. Place product on the turntable
2. Make sure the film carriage is situated at the max down position.
3. Thread the film as instructed, and attach it to the product.
4. Set the desired number for top and bottom wrap counts.
5. Select wrapping made “A”, “B”, or “C”.
6. Press the “Start button to initiate cycle.

Stop Condition

Follow the procedure below in the event of an emergency.

1. Press the “STOP” button. This cancels the current wrapping cycle and immediately stops the system.
2. Correct the problem.
3. Pull the “STOP” button out, and then perform normal system start-up procedure.

Note
After pressing the “E-STOP” button, wait for at least 60 (sixty) seconds before pulling the button back out. This will allow the microcontroller card to completely turn off.

Applying Reinforcement Wraps

Automatic operation can be paused in order to apply reinforcement wraps to an additional top sheet or corner boards on the product. Follow he procedure below.

1. Press the “START” button as normal to initiate cycle.
2. As the carriage travels up, press the “Banding” button. The carriage will stop and reinforcing wraps will be applied.
3. Letting go of the “Banding” button will resume the cycle.

5

Highlight Industries, Inc.

Predator SS Turntable Stretch Wrapper Operation Manual

Maintenance

Preventative Maintenance

As with all machinery, proper attention and maintenance is the key to long component life, maximum performance, and safe operation. By spending a few minutes reading and following these preventive measures, you should reduce the downtime and prolong the life of your system.

It is important to understand that these maintenance schedules are minimum recommendations. *Highlight Industries, Inc.* cannot possibly know, evaluate, or advise the various trades in all schedules of periodic maintenance. Accordingly, anyone who maintains or services a stretch wrap machine must first satisfy himself/herself as to the schedules of preventive maintenance based on cycling operation and environmental locations.

Warning!
All maintenance operations require the equipment to be powered down and locked out for personnel safety.

Lock-out/ Tag-out Procedures

Be sure that anyone performing any type of maintenance on this equipment is familiar with and is adhering to the lock-out/tag-out procedures set forth by the General OSHA or the State OSHA guidelines.

Visual Checks

Visual checks should be conducted daily before operating equipment:

1. Keep the machine and surrounding area as clean as possible, especially near moving components.

2. Check for loose hardware, especially set screws located in: sprocket hubs, bearing hubs, and flanges.

3. Check for oil leaks around the speed reducers.

4. Check for dry seals at the bearings.

5. Check for chain wear and proper tension on the power roller stretch sprockets. The correct amount of chain tension can be checked by pulling the chain taut and having 3/8” slack.

6. Check for loose electrical connections and for frayed cords and cables. Replace immediately any damaged cords and cables.

Turntable Belt Adjustment

Refer to the figure below to adjust the turntable belt. First, loosen the four motor flange (M10) screws. Turn the (M10) bolt on the adjuster tab until the belt is tensioned. Retighten the four motor flange screws.

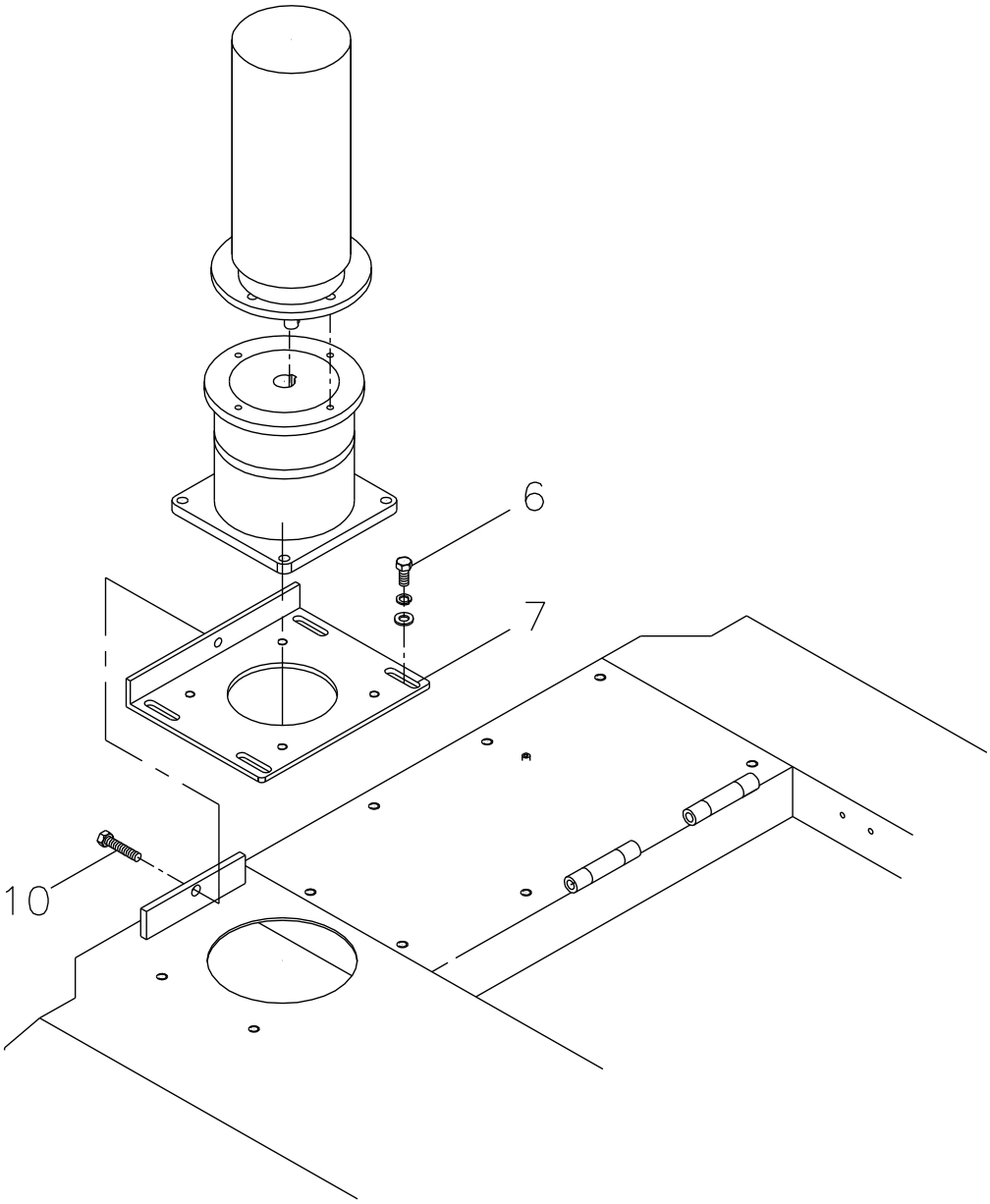

Figure 8: Turntable Belt Adjustment

Film Carriage Lift Chain Adjustment

Refer to the figure below to adjust the film carriage lift chain. First, loosen nut (M12) on the adjustment bracket. Turn the bottom bolt until desired tension is achieved. Retighten nut (M12). Note that the driving chain and adjustment bracket should be parallel with the movable pulley base.

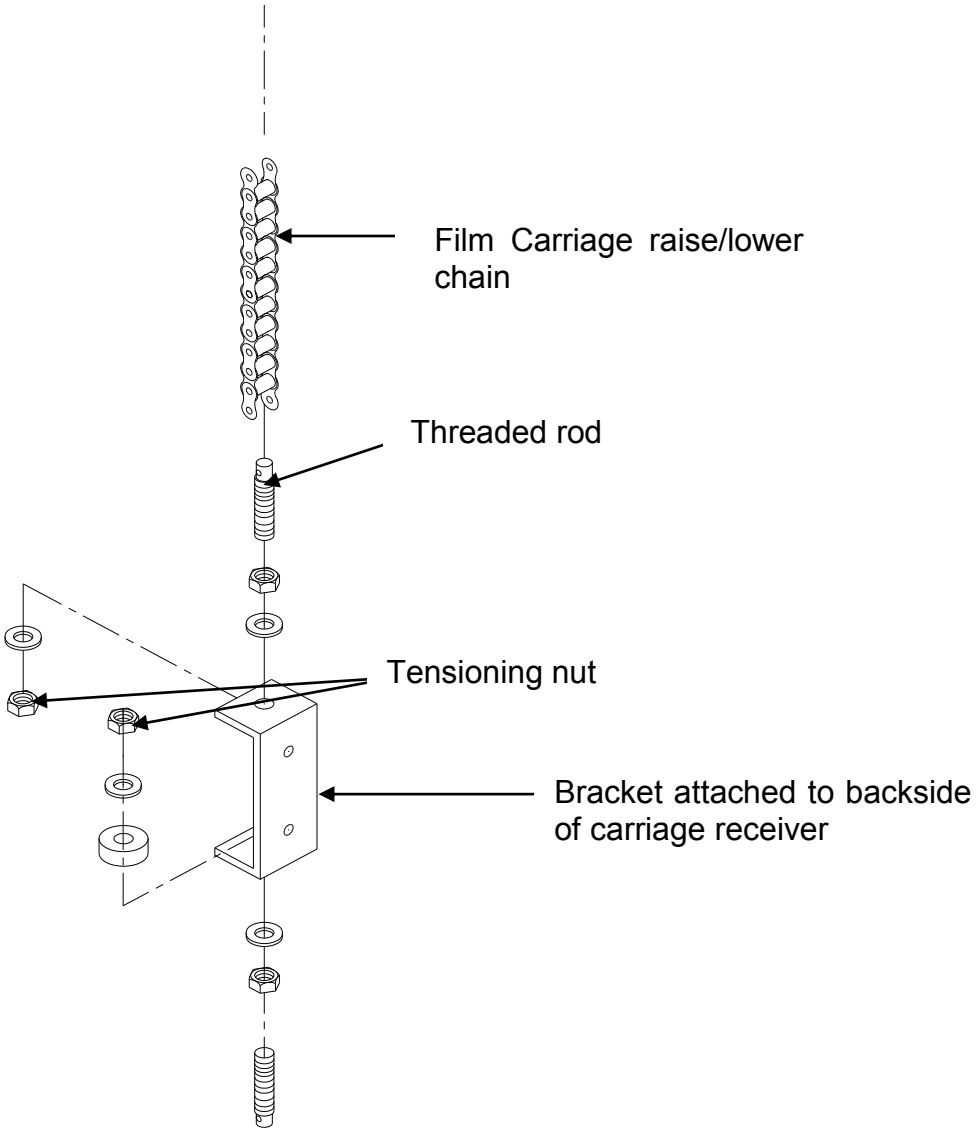

Figure 9: Film Carriage Lift Chain Adjustment

Sprockets and Chains

All sprockets should be inspected for wear, and chains should be checked for proper tension and lubrication on a periodic basis. Failure to do so will lead to premature sprocket failure. Any general-purpose chain lube should be sufficient for lubrication. Replace chain guards when preventative maintenance is complete.

Maintenance Schedule

Part	Schedule	Service With
Carriage Lift Belt	Check and tighten every six months.	
All pivot bearings	Initially first 1,000 cycles; every 10,000 cycles thereafter.	Mobil EP-2 grease

Note
For additional maintenance information about specific components on the machine, refer to the components operation manuals shipped inside the main enclosure.

6

Highlight Industries, Inc.

Predator SS Turntable Stretch Wrapper Operation Manual

Trouble-shooting

Self Test Troubleshooting

Warning!
Make sure that only qualified personnel will perform inspection, troubleshooting, and part replacement.

An operator may check the status of the machine by running one of the self-tests. If the procedures are carried out of properly, the INFO screen will display the location of the problem.

To run Self-test A, follow the procedure below:

1. Turn the turntable and carriage speed adjustment knobs to maximum (clockwise) position.
2. Put a load on the turntable (about 3-feet tall).
3. While holding down the **TURNTABLE JOG** and **CARRIAGE JOG** buttons, turn the main disconnect switch ON.
4. Release the buttons after the screen shows “EE”
5. Push the **START** button. The machine will run the test, which takes approximately two minutes.
6. The screen will display the alarm code. Refer to the table below for code information.

Display	Possible Problem Location(s)
E1	Film carriage max upper limit switch
E2	Film carriage max down limit switch
E3	Turntable count/home proximity switch
E4	Package height photo sensor

To run self-test B, follow the procedure below:

1. Turn the turntable and carriage speed adjustment knobs to maximum (clockwise) position.
2. Put a load on the turntable (about 3-feet tall).
3. While holding down the **TOP WRAPS** and **BOTTOM WRAPS** buttons, turn the main disconnect switch ON.

4. Release the buttons after the screen shows “99”

5. The limit switches and sensors should be on during operation. The screen will display the alarm code that gives information about alarm code.

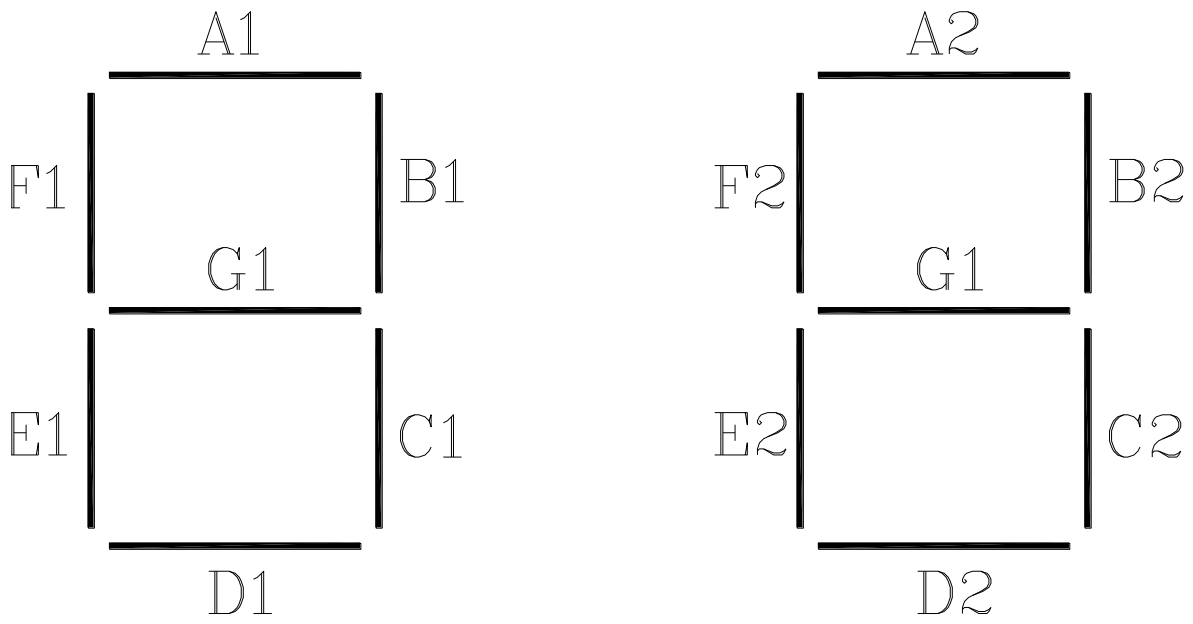

Figure 10: Self Test Error Display

Display	Possible Problem Location(s)
A1	Film Carriage Safety Bar
	EMERGENCY STOP button
	Electrical enclosure safety switch
B1	Film carriage max upper limit switch
C1	Film carriage max down limit switch
D1	Turntable count/home proximity switch
E1	**BANDING** push button
F1	**START** push button
G1	Package height photo sensor
A2	**START** light
B2	Turntable motor
C2	Carriage motor

Additional INFO Messages

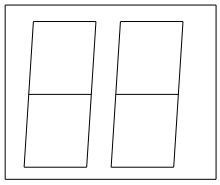	During normal machine operation, the following messages might be displayed: EO = Emergency Stop condition - - = System is normal **- -** = Blinking = Power supply is bad or both carriage up and down limit switch inputs are on A = Mode A is selected B = Mode B is selected CO = Continue operation by pushing **START** button S = System is in Manual

Troubleshooting Guide

Warning!
Make sure that only qualifies personnel will perform inspection, troubleshooting, and part replacement.

High Voltage!
Disconnect all power including external control power that may be present before servicing the machine. Wait 3 (three) minutes for the microcontroller card to fully discharge. The machine INFO and/or LED's are not accurate indicators of the absence of voltage.

The diagrams in this section will guide you in identifying typical problems while operating the Predator Turntable Stretch Wrapper, and provide you with corresponding solution(s). Problems are divided in reference to the machine functions: power, turntable, and film carriage.

If further assistance is required, contact the distributor from whom you have purchased the equipment, or call the number listed on the bottom page of this manual. To receive quick and proper technical support, please be prepared to provide the following information:

1. Machine serial number
2. Date of purchase
3. Symptoms of any problem

Power Problems

Problem	Possible Cause	Possible Solution
The machine does not power up. (INFO screen is blank)	The machine is not plugged in.	Plug the machine into a 120VAC, 20A outlet.
	The Main Disconnect is turned off.	Turn the Main Disconnect on.
	A fuse is blown.	Replace the fuse(s).
	The power supply has malfunctioned.	Ensure fuses F6 and F7 are not blown. Replace the power supply (transformer card).
	Power to the machine is not correct	Use a voltmeter to check that the machine is receiving 120VAC.
The INFO display shows E0	The Emergency Stop button is pressed.	Turn the breaker back on, or replace if necessary.
	The film carriage foot safety switch is tripped.	Remove any obstructions and check that the switch is working properly.
	The electrical enclosure door switch is open.	Ensure the door is closed and that the safety switch is made.
The INFO display is flashing ‘- -‘	The power supply has malfunctioned.	Ensure fuses F6 and F7 are not blown. Replace the power supply (transformer card).
	The carriage raised/lowered limit switches are both tripped.	Ensure there are no obstructions and that the switches are working properly.

Turntable Problems

Problem	Possible Cause	Possible Solution
The turntable does not rotate manually.	The Start Button was not pressed.	The Start button needs to be pressed at the same time as the turntable job button to activate manual mode.
	The Turntable speed potentiometer is not set high enough.	Adjust the turntable speed towards 100%.
	The turntable is mechanically restricted.	Check the condition of the motor, chain, and rollers under the turntable. Replace as necessary.
	The turntable speed potentiometer has failed.	Use a multi-meter to check the resistance of the potentiometer.
	A fuse on the microcontroller card has blown.	Check fuses and replace as needed.
	The motor is not wired correctly.	Check wiring to the motor and replace as necessary.
The turntable does not stop at home.	The Turntable Home proximity switch is malfunctioning.	Check the wiring to the proximity switch and that it is adjusted properly (only 8mm sensing range). Replace as necessary.

Film Carriage Problems

Problem	Possible Cause	Possible Solution
The Film Carriage does not Raise or Lower manually or in the wrap cycle.	The Start Button was not pressed.	The Start button needs to be pressed at the same time as the carriage raise/lower button to activate manual mode.
	The Carriage Banding button is tripped.	Ensure the banding button is not tripped and that the button is working properly.
	The Film Carriage Raised/Lowered limit switch is malfunctioning.	Ensure that the carriage limit switch is clear of any obstruction and moves smoothly. Check wiring to the limit switch and replace as necessary.
	The film carriage speed potentiometer is not set high enough.	Adjust the speed potentiometer towards 100%.
	The film carriage speed potentiometer has failed.	Use a multi-meter to check the resistance of the potentiometer.
	A fuse on the microcontroller card has blown.	Check fuses and replace as needed.
	The motor is not wired correctly.	Check wiring to the motor and replace as necessary.
The Film Carriage rises some, but does not rise to the top of the package.	The Product Height Detection photo eye is positioned too high.	Slide the Product Height Detection photo eye lower.
	The Product Height Detection photo eye does not see the load.	Black or clear loads may require an optional advanced sensor instead of the standard diffuse sensor.
		Check wiring to the sensor.
		Replace the sensor as necessary.
	The Product Height Detection photo eye is not adjusted properly.	Adjust position or sensitivity of the sensor.
The Film Carriage rises too far above the package.	The Product Height Detection photo eye is positioned too low.	Slide the Product Height Detection photo eye higher.
	The Product Height Detection photo eye is not adjusted properly and always sees a ’package’.	Adjust the sensitivity of the sensor (see the Photo Sensor Adjustments and/or Pre-Operation Adjustments section).

7

Highlight Industries, Inc.

Predator SS Turntable Stretch Wrapper Operation Manual

Technical References

Recommended Spare Parts

The table below provides the recommended spare parts list for the Predator SS Turntable Stretch Wrapper.

Machine Section	HLI Part Number	Item Description	Qty
Turntable	300013	BELT B-172	1
Turntable	500010	PLASTIC SUPPORT WHEEL	6
Turntable	300037	TURNTABLE DRIVE MOTOR – 1/4HP (60” dia turntable)	1
Turntable	300040	TURNTABLE DRIVE MOTOR – 1/2HP (72” dia turntable)	1
Turntable	300031	TURNTABLE DRIVE REDUCER (60” dia turntable)	1
Turntable	300032	TURNTABLE DRIVE REDUCER (72” dia turntable)	1
Scale	306275	LOAD CELL	1
Scale	306276	LOAD CELL FOOT	1
Tower	300038	CARRIAGE LIFT MOTOR – 1/4HP	1
Tower	300030	CARRIAGE LIFT REDUCER	1

Electrical Drawings

Electrical Schematics

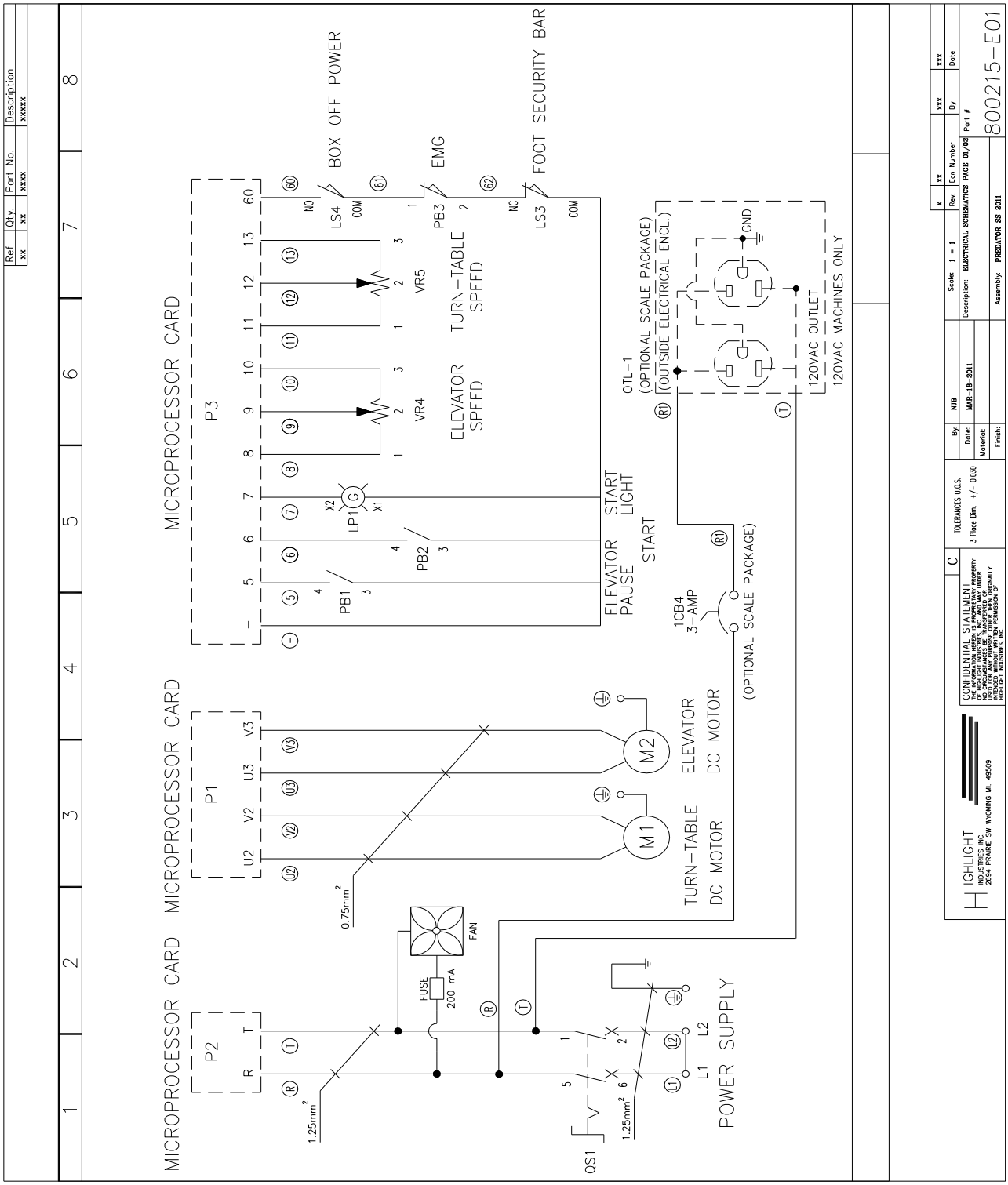

Electrical Schematics (continued)

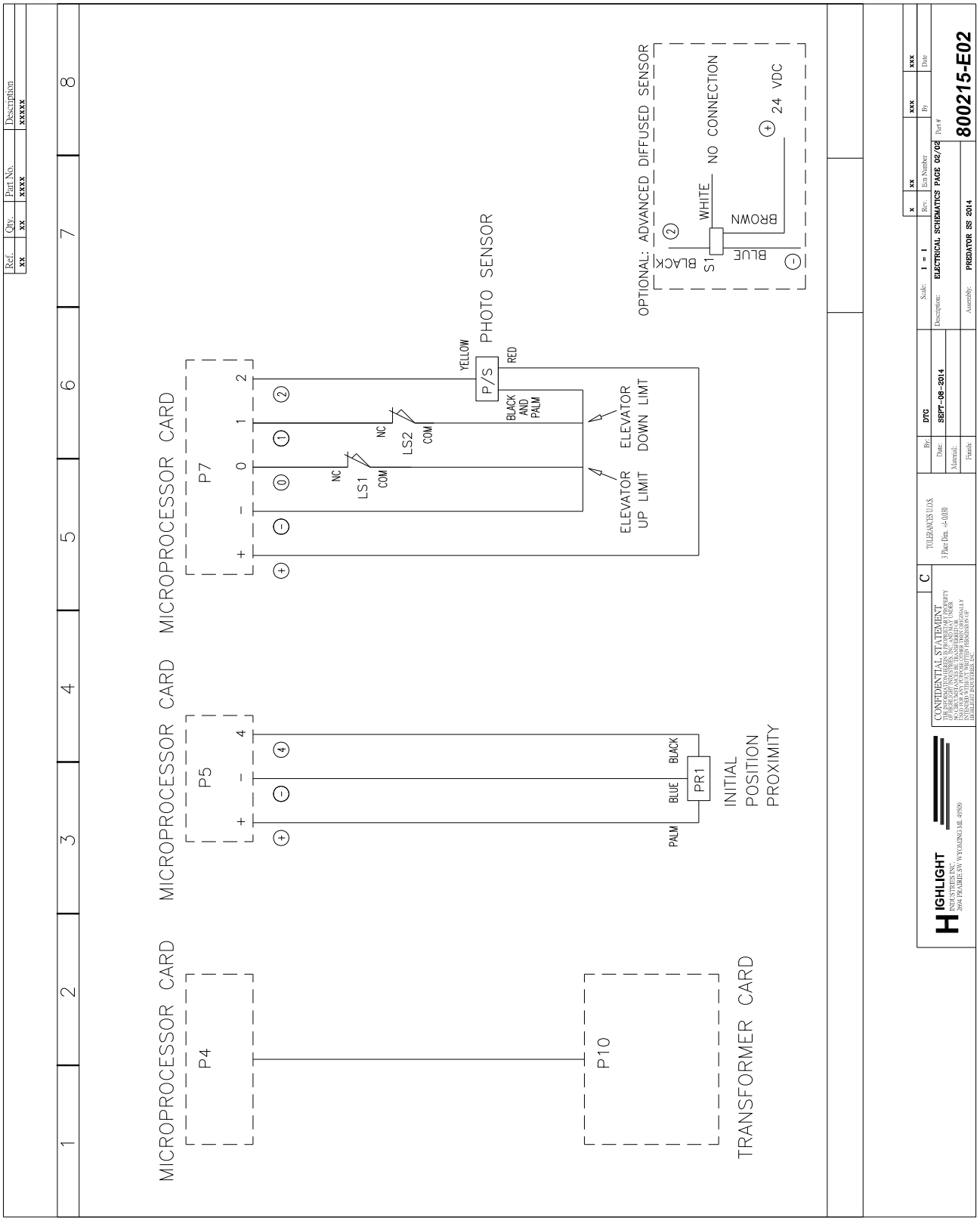

Enclosure Layout

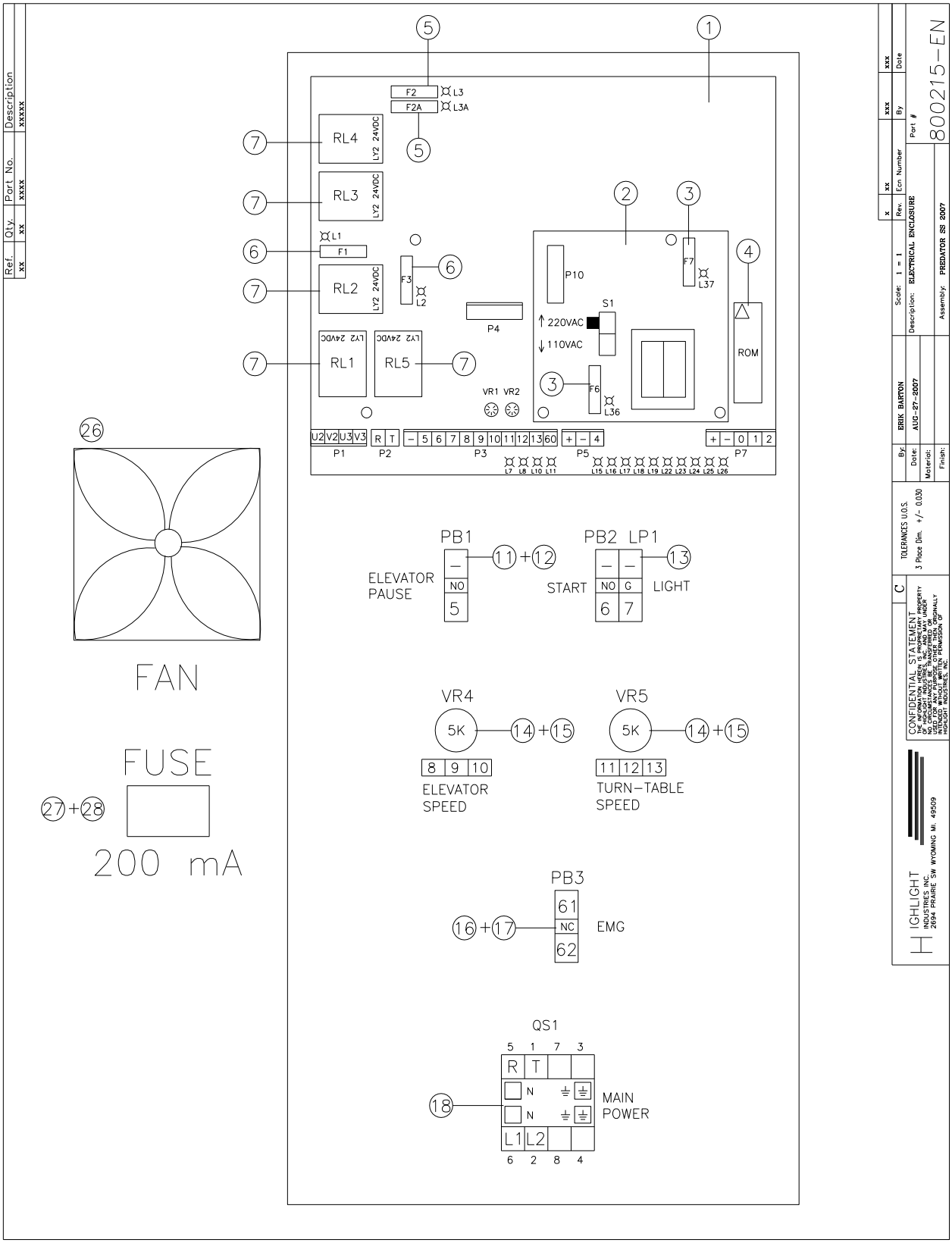

Sensor Layout

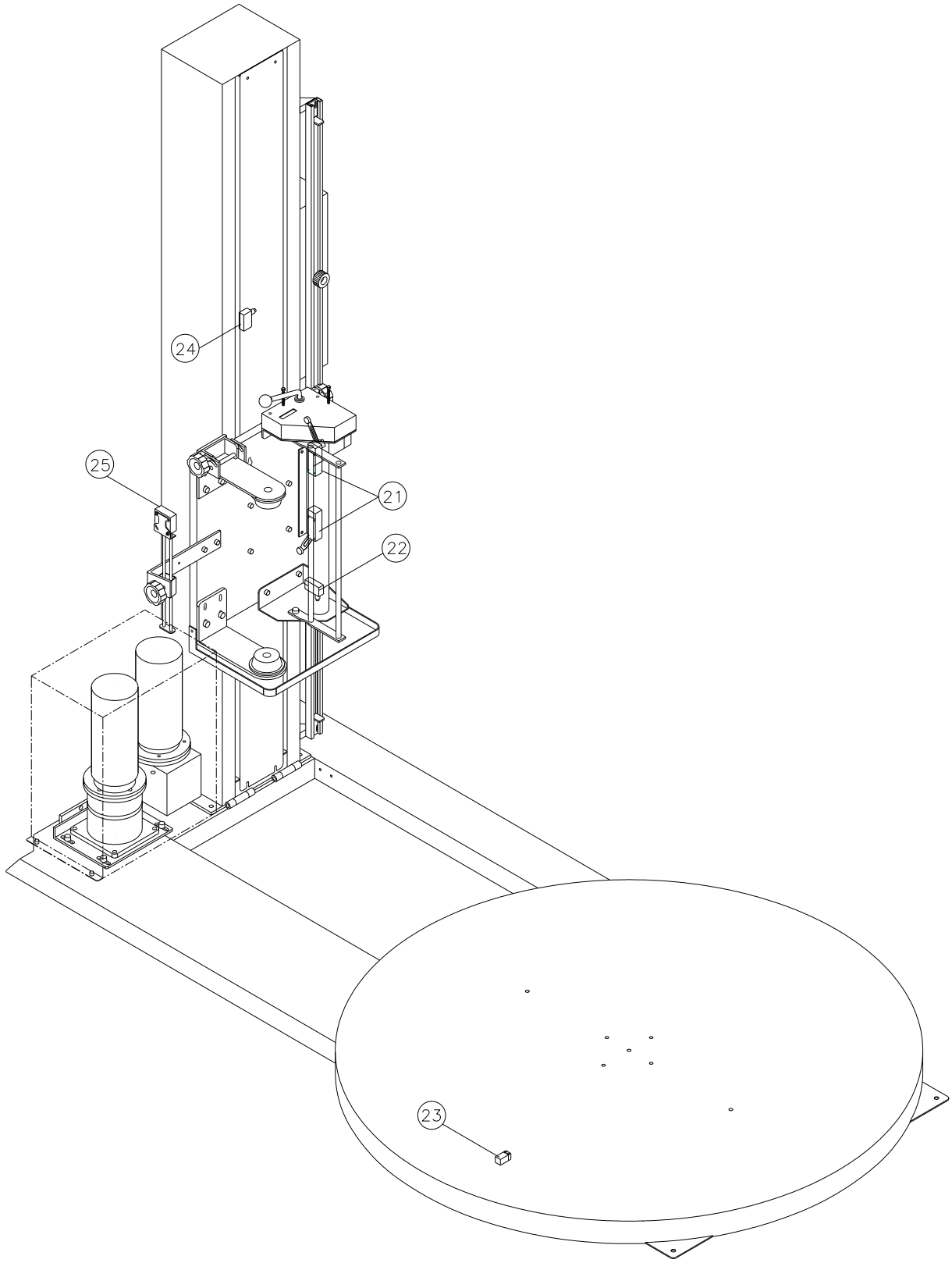

Electrical Parts List

Machine Section	HLI Part Number	Item Description	Qty
1	401495	MICROPROCESSOR CARD	1
2	401361	TRANSFORMER CARD	1
3	401362	FUSE, 250 VAC, 1 AMP, GMA	2
4	401363	EPROM	1
5	403261	FUSE, 250 VAC, 10 AMP, GMA	2
6	401365	FUSE, 250 VAC, 5 AMP, GMA	2
7	401366	RELAY LY2 DC24V	5
11	401367	BUTTON WHITE	1
12	401368	BUTTON SEAT CONTACTOR Nox1	1
13	400609 400610 400611	AUTO RUN GREEN LAMP: COVER SEAT LIGHT	1 1 1
14	401371	KNOB RN-99F,ø6.4	2
15	400649	VARIOUS RESISTOR 5K	2
16	401372	EMG. SWITCH	1
17	401373	BUTTON SEAT CONTACTOR NCx1	1
18	401374	MAIN POWER SWITCH	1
21	400639	LIMIT SWITCH TZ-8108	2
22	400636	LIMIT SWITCH TM-1307	1
23	400641	PROXIMITY SWITCH PS-05N-3M	1
24	400637	LIMIT SWITCH TZ-7110	1
25	400643	PHOTO SENSOR A3R-2MX(OPTION)	1
26	404261	FAN, 80MM, 110-120VAC	1
27	404262	FUSE HOLDER	1
28	404263	FUSE, 0.2A, 30MM	1
N/S	310008	BUTTON MEMBRANE LABEL FOR CONTROL PANEL	1
N/S	403409	CARRIAGE CONTROL CABLE	1

Mechanical Drawings

Turntable Frame Assembly

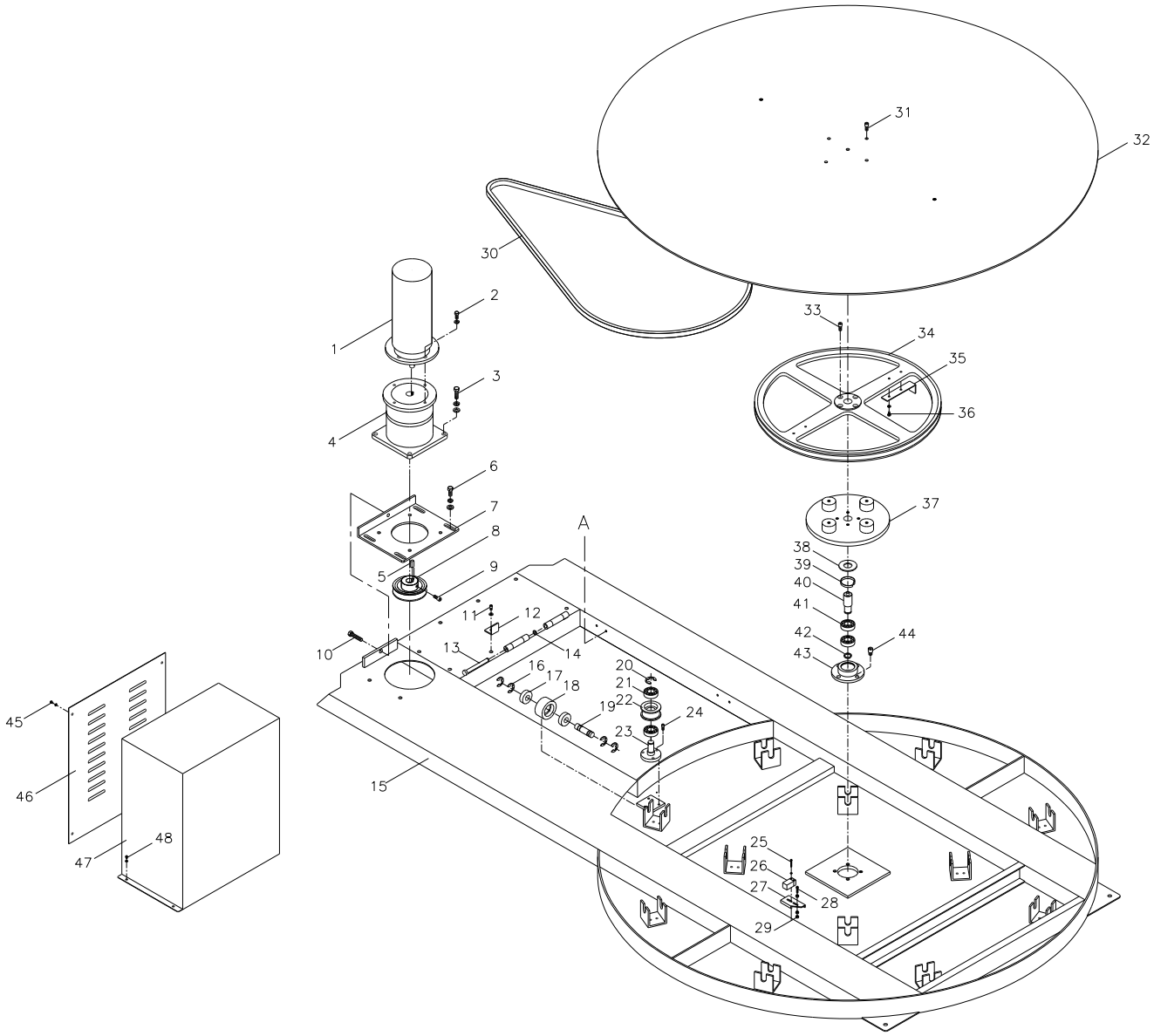

Turntable Parts List

Machine Section	HLI Part Number	Item Description	Qty
1	300037 300040	MOTOR VP3310D 1/4HP →1.5M MOTOR VP3330D 1/2HP →1.8M	1 1
2	200091	SCREW M8X20L & W.	
3	200092	SCREW M10x20L & S.W. & W.	4
4	300031 300032	SPEED REDUCER 1/4HP →1.5M SPEED REDUCER 1/2HP →1.8M	1 1
5	300002	KEY 5X20L	1
6	200093	SCREW M10x25L & S.W. & W.	4
7	500034 500035	MOTOR ADJUST SEAT →1.5M MOTOR ADJUST SEAT →1.8M	1 1
8	500014 500015	MOTOR PULLEY 4”22 →1.5M MOTOR PULLEY 4”28 →1.8M	1 1
9	207303	SET SCREW, M8 x 10L	2
10	200095	SCREW M10x70L	1
11	200077	SCREW M6x12L & W.	1
12	500083	MOTOR BOX FIX PLATE	1
13	500087	PIN	2
14	300006	RING STW-10	2
15	600000 600001	TURNTABLE SEAT 1.5M TURNTABLE SEAT 1.8M	1 1
16	300009	RING STW-17	48
17	305300 305300	BEARING 6203ZZ →1.5M BEARING 6203ZZ →1.8M	24 28
18	500010 500010	SUPPORTING PLASTIC WHEEL →1.5M SUPPORTING PLASTIC WHEEL →1.8M	12 14
19	500009 500009	SUPPORTING PLASTIC WHEEL SHAFT →1.5M SUPPORTING PLASTIC WHEEL SHAFT →1.8M	12 14
20	300009	RING STW-17	1
21	305300	BEARING 6203ZZ	2
22	500011	BELT LOCK PULLEY	1
23	500012	BELT LOCK PULLEY SHAFT	1
24	200078	SCREW M6x16L	3
25	200098	SCREW M3x25L & W.	2
26	400641	PROXIMITY SWITCH PS-05N-3M	1

27	500013	PROXIMITY SWITCH FIX SEAT	1
28	200103	SCREW M4x20L	2
29	200128	NUT M5	6
30	300013 300014	BELT B-172 →1.5M BELT B-183 →1.8M	1 1
31	200113	SCREW M8x25L	4
32	500004 500005	TURNTABLE PLATE 1.5M TURNTABLE PLATE 1.8M	1 1
33	200084	SCREW M8x20L	4
34	500007	WHEEL 22”	1
35	500006	LOCATING PLATE	1
36	200108	SCREW M5x10L & W.	4
37	500008	PULLEY FIXING PLATE	1
38	500085	BELT PULLEY SEAT RING	1
39	300012	RING RTW-42	1
40	500084	BELT PULLEY SHAFT	1
41	300018	BEARING 6004ZZ	2
42	300010	RING STW-20	1
43	500086	BELT PULLEY BEARING SEAT	1
44	200088	SCREW M10x16L	4
45	200100	SCREW M4x8L & W.	4
46	500081 500082	MOTOR COVER →1.5M MOTOR COVER →1.8M	1 1
47	600028 600029	TURNTABLE MOTOR BOX 1.5M TURNTABLE MOTOR BOX 1.8M	1 1
48	200100	SCREW M4x8L & W.	2
49	600038	RAMP (FOR 60” TURNTABLE - NOT SHOWN)	OPT
50	600039	RAMP PORCH – 24” (FOR 60” TURNTABLE - NOT SHOWN)	OPT
51	602297	RAMP PORCH – 48” (FOR 60” TURNTABLE - NOT SHOWN)	OPT

Turntable Scale Frame Assembly (optional)

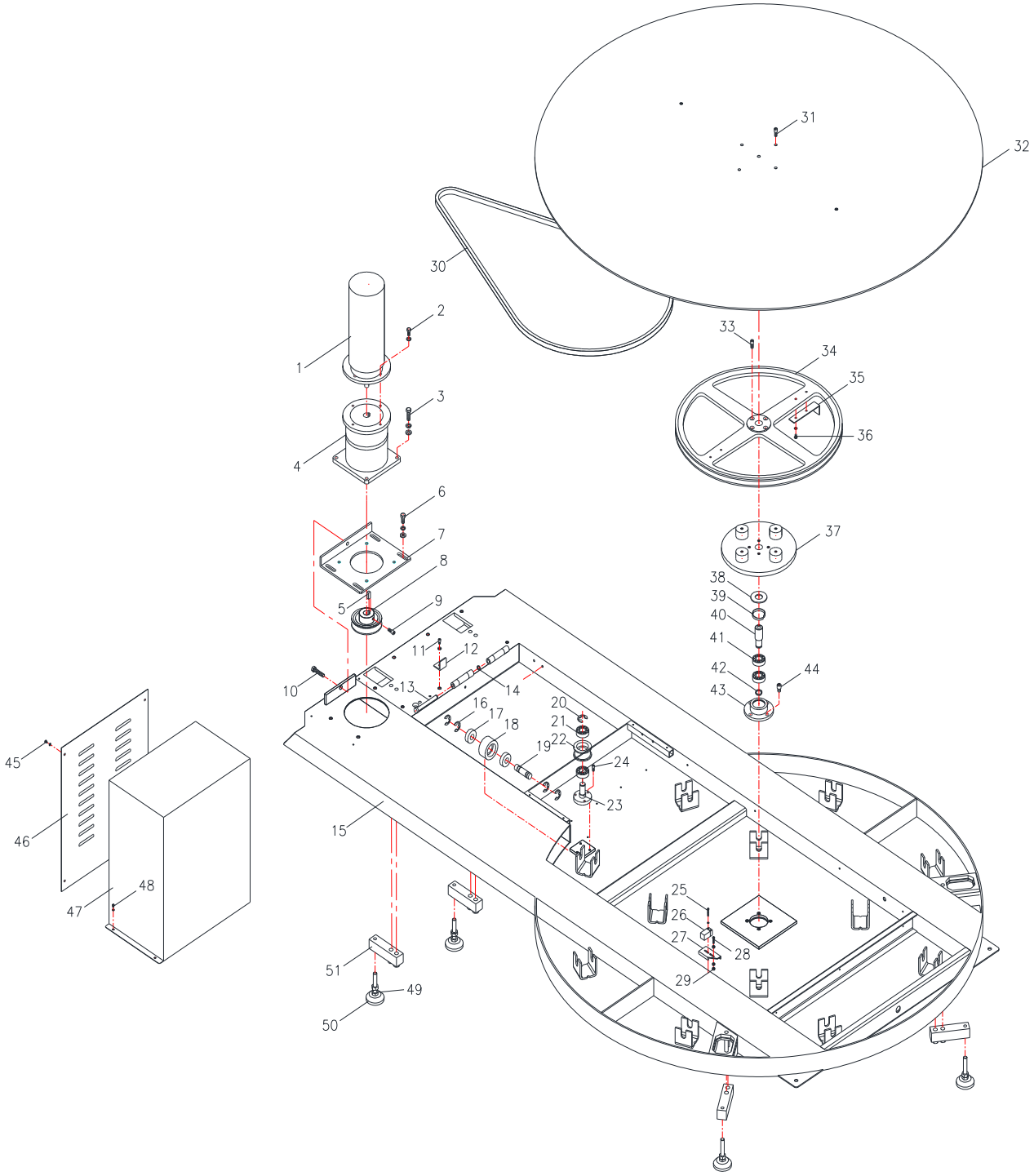

Turntable Parts List

Machine Section	HLI Part Number	Item Description	Qty
1	300037	MOTOR VP3310D 1/4HP →1.5M	1
2	200091	SCREW M8X20L & W.	
3	200092	SCREW M10x20L & S.W. & W.	4
4	300031	SPEED REDUCER 1/4HP →1.5M	1
5	300002	KEY 5X20L	1
6	200093	SCREW M10x25L & S.W. & W.	4
7	500034	MOTOR ADJUST SEAT →1.5M	1
8	500014	MOTOR PULLEY 4”22 →1.5M	1
9	207303	SET SCREW, M8 x 10L	2
10	200095	SCREW M10x70L	1
11	200077	SCREW M6x12L & W.	1
12	500083	MOTOR BOX FIX PLATE	1
13	500087	PIN	2
14	300006	RING STW-10	2
15	600424	TURNTABLE SEAT WITH INTEGRAL SCALE - 1.5M	1
16	300009	RING STW-17	48
17	300021	BEARING 6203ZZ →1.5M	24
18	500010	SUPPORTING PLASTIC WHEEL →1.5M	12
19	500009	SUPPORTING PLASTIC WHEEL SHAFT →1.5M	12
20	300009	RING STW-17	1
21	300021	BEARING 6203ZZ	2
22	500011	BELT LOCK PULLEY	1
23	500012	BELT LOCK PULLEY SHAFT	1
24	200078	SCREW M6x16L	3
25	200098	SCREW M3x25L & W.	2
26	400641	PROXIMITY SWITCH PS-05N-3M	1
27	504280	PROXIMITY SWITCH FIX SEAT	1
28	200103	SCREW M4x20L	2
29	200128	NUT M5	6
30	300013	BELT B-172 →1.5M	1
31	200113	SCREW M8x25L	4
32	500004	TURNTABLE TOP →1.5M	1

33	200084	SCREW M8x20L	4
34	500007	WHEEL 22”	1
35	504281	LOCATING PLATE	1
36	200108	SCREW M5x10L & W.	4
37	500008	PULLEY FIXING PLATE	1
38	500085	BELT PULLEY SEAT RING	1
39	300012	RING RTW-42	1
40	500084	BELT PULLEY SHAFT	1
41	300018	BEARING 6004ZZ	2
42	300010	RING STW-20	1
43	500086	BELT PULLEY BEARING SEAT	1
44	200088	SCREW M10x16L	4
45	200100	SCREW M4x8L & W.	4
46	500081	MOTOR COVER →1.5M	1
47	600028	TURNTABLE MOTOR BOX 1.5M	1
48	200100	SCREW M4x8L & W.	2
49	200140	JAM NUT – M12	REF
50	306276	LOAD CELL FOOT	4
51	306275	LOAD CELL	4
52	300353	SCALE DISPLAY (NOT SHOWN)	1
53	600947	RAMP – INTEGRATED SCALE (NOT SHOWN)	OPT
54	510287	SUMMING BOARD COVER (NOT SHOWN)	1

Tower Assembly

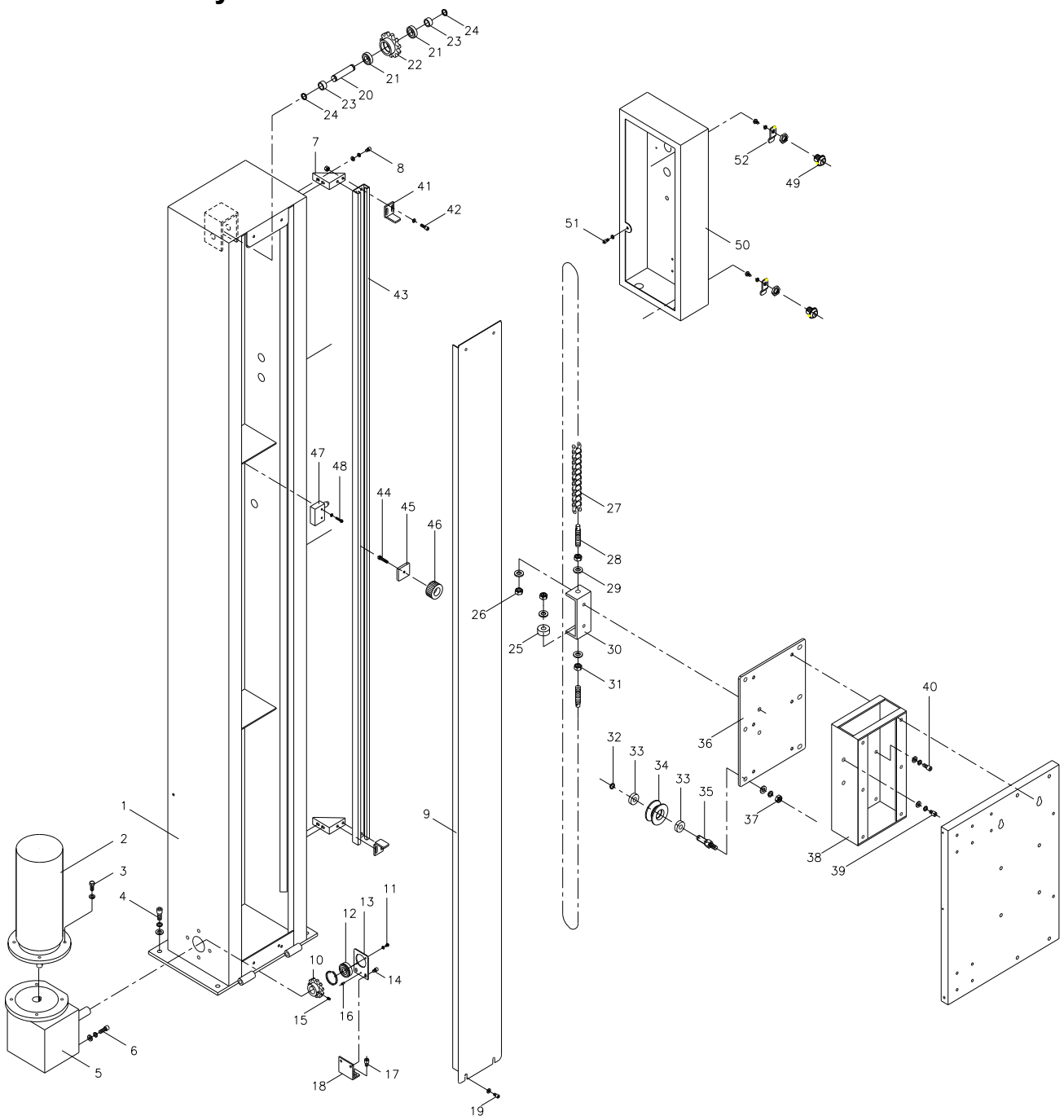

Tower Parts List

Machine Section	HLI Part Number	Item Description	Qty
1	500133 500317	TOWER - STD TOWER - 110	1 1
2	300038	ELEVATOR UNIT MOTOR VP3310D	1
3	200091	SCREW M8x20L & S.W.	4
4	200090	SCREW M10x25L & S.W. & W.	5
5	300030	ELEVATOR UNIT SPEED REDUCER VTM-40	1
6	200085	SCREW M8x25L & S.W. & W.	4
7	500135	CHANNEL SUPPORT	2
8	200078	SCREW M6x16L & S.W. & W.	4
9	500136 500290	CHAIN WHEEL COVER - STD CHAIN WHEEL COVER - 110	1 1
10	500041	UP & DOWN CHAIN WHEEL (LOWER) 11 TEETH	1
11	200802	SHCS, M6 x 16L & S.W & W	1
12	300020	BEARING 6202-2NR	1
13	500102	SPEED REDUCER BEARING SEAT	1
14	200099	SCREW M4x6L & W.	2
15	200120	SCREW M6x8L	1
16	300000	PIN ø4X8	1
17	200082	SCREW M8x12L	2
18	500103	BEARING ADJUST SEAT	1
19	200077	SCREW M6x12L & W.	4
20	500003	UPPER CHAIN WHEEL SHAFT	1
21	300017	BEARING 6002ZZ	2
22	500118	UPPER CHAIN WHEEL	1
23	500093	RING	2
24	300008	RING STW-15	2
25	500104	ADJUST BAR WASHER	1
26	200140	NUT M12	1
27	300049 500488	CHAIN - STD CHAIN - 110	1 1
28	500025	ELEVATOR UNIT CHAIN SCREW SHAFT	2
29	200147	WASHER M12	4
30	500092	CHAIN ADJUST SEAT	1

31	200133	NUT M12	3
32	300007	RING STW-12	6
33	300016	BEARING 6001ZZ	8
34	500090	UP & DOWN DRIVING WHEEL	4
35	500091	UP & DOWN DRIVING WHEEL SHAFT	4
36	500040	CHAIN WHEEL SEAT	1
37	200131	NUT M10 & S.W. & W.	6
38	600008	ELEVATOR UNIT SEAT (INNER)	1
39	200084	SCREW M8x20L & S.W. & W.	2
40	200083	SCREW M8x16L & S.W. & W.	6
41	500138	LIMIT PLATE	2
42	200125	SCREW M6x16L & S.W & NUT	4
43	500139 500140	CHANNEL - STD CHANNEL - 110	1 1
44	200078	SCREW M6x16L	1
45	500141	FIX PIECE	1
46	500142	HANDEL WHEEL	1
47	400637	LIMIT SWITCH TZ-7110	1
48	200105	SCREW M4x30L & W	2
49	300041	LOCK w/ KEY	2
50	500143	CONTROL BOX	1
50a	310008	BUTTON MEMBRANE LABEL FOR CONTROL PANEL	1
51	200076	SCREW M6x10L & S.W.	1
52	300048	LOCK LATCH PLATE	2

Film Carriage Assembly

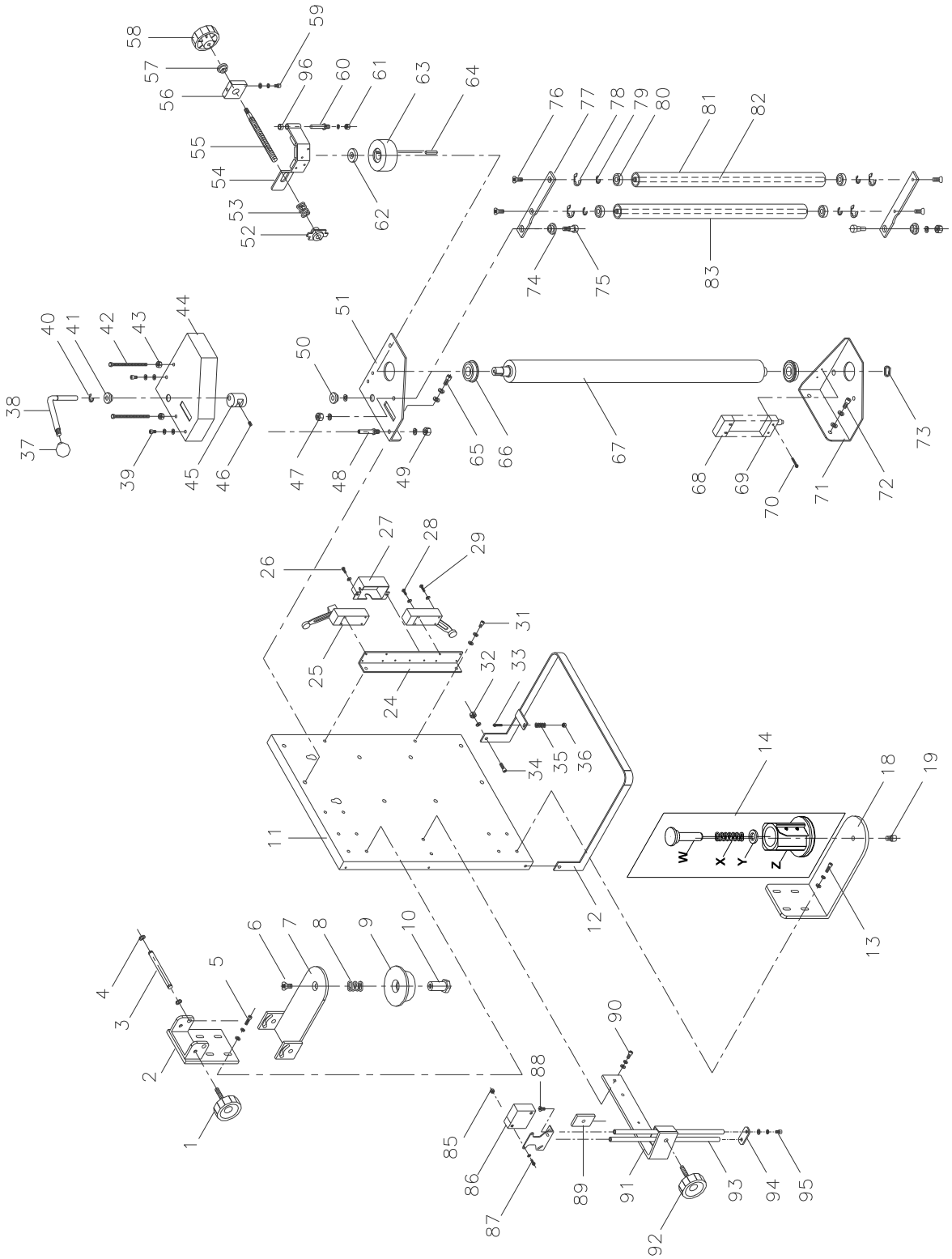

Film Carriage Parts List

Machine Section	HLI Part Number	Item Description	Qty
1a	500000	KNOB	1
1b	204908	KNOB THREADED ROD STUD	1
2	500144	FILM FIX SEAT(UPPER)	1
3	500145	SHAFT	1
4	300006	RING STW-10	2
5	200079	SCREW M6x20L & S.W. & W.	4
6	200627	FLAT HEAD SCREW M10x20L	1
7	500146	FILM MOVING SHAFT	1
8	500147	FILM SEAT SPRING	1
9	500148	FILM SEAT(UPPER)	1
10	500101	FILM SEAT SHAFT	1
11	500149 504260	ELEVATOR UNIT SEAT(OUTER)-20” ELEVATOR UNIT SEAT(OUTER)-30”	1 1
12	500150	PEDAL	1
13	200079	SCREW M6x20L & S.W. & W.	4
14	700072	LOWER CORE HOLDER ASSEMBLY	1
	W	FILM SEAT SHAFT	1*
	X	SPRING	1*
	Y	BEARING NTB/A51730	1*
	Z – 500107	FILM CORE HOLDER	1*
	Za – 500111	FILM BRAKE PLATE	2*
	Zb – 500694	FILM BRAKE DISC	1*
	Zd – 500112	WASHER	1*
18	500151	FILM FIX SEAT(LOWER)	1
19	200089	SCREW M10x20L	1
23	200079	SCREW M6x20L & S.W. & W.	2
24	500152	LIMIT SWITCH SEAT	1
25	400639	LIMIT SWITCH TZ-8108	2
26	200101	SCREW M4x12L	2
27	500130	TERMINAL COVER	1
28	200102	SCREW M4x16L	4
29	200101	SCREW M4x12L	4
31	200077	SCREW M6x12L & S.W. & W.	2

32	200137	NUT M6	2
33	200103	SCREW M4x20L	1
34	200079	SCREW M6x20L	2
35	500016	SPRING	1
36	200127	NUT M4	2
37	500913	HANDLE KNOB	1
38	500153	HANDLE	1
39	200077	SCREW M6x12L & S.W. & W.	2
40	300006	RING STW-10	1
41	500154	RING	1
42	200157	SCREW M6x100L	2
43	200129	NUT M6	4
44	500155	STRETCH SEAT COVER(UPPER)	1
45	500156	WHEEL	1
46	200121	SCREW M6x10L	1
47	200130	NUT M8 & S.W.	2
48	500157	STRETCH SEAT SHAFT	1
49	200130	NUT M8 & W.	1
50	500158	RING	1
51	500159	UPPER STRETCH SEAT	1
52	500160	TENSION ADJUST SEAT	1
53	500161	STRETCH SPRING	1
54	500162	BRAKE PLATE	1
55	500163	TENSION ADJUST SCREW	1
56	500164	GEAR SCREW FIX SEAT	1
57	500154	RING	1
58	500000	HANDLE	1
59	200077	SCREW M6x12L & S.W. & W.	2
60	500165	BREAK PLATE SHAFT	1
61	200129	NUT M6 & S.W.	2
62	500166	BREAK WHEEL FIX SHAFT	1
63	500167	BRAKE WHEEL	1
64	300002	PIN 5x5x20L	1
65	200084	SCREW M8x20L & S.W. & W.	2
66	300051	BEARING 6004ZZ-NR	2

67	500168 504261	PRE-STRETCH SHAFT-20” PRE-STRETCH SHAFT-30”	1 1
68	400640	WIRE PROTECTOR	1
69	400636	LIMIT SWITCH TM-1307	1
70	200104	SCREW M4x25L	2
71	500169	LOWER STRETCH SEAT	1
72	200084	SCREW M8x20L & S.W. & W.	2
73	300010	RING STW-20	1
74	500158	RING	2
75	500170	MOVING SHAFT PIN	2
76	200833	SCREW M6x12L	4
77	500171 500172	MOVING SHAFT MOVING SHAFT	1 1
78	300052	RING STW-22	4
79	300006	RING STW-10	4
80	300015	BEARING 6000ZZ	4
81	500173 504262	IDLER ROLLER-20” IDLER ROLLER-30”	1 1
82	500174 504263	IDLER ROLLER SHAFT-20” IDLER ROLLER SHAFT-30”	2 2
83	500175 504264	IDLER ROLLER-20” IDLER ROLLER-30”	1 1
85	200127	NUT M4 (OPTION)	2
86	400643	PHOTO SENSOR A3R-2MX	1
87	200101	SCREW M4x12L & W.	2
88	200110	SCREW M6x12L	2
89	500094	FIX PIECE	1
90	200079	SCREW M6x20L & S.W. & W.	2
91	500176	PHOTO SENSOR ADJUST SEAT	1
92	500000	HANDLER	1
93	500095	PHOTO SENSOR ADJUST BAR	2
94	500096	CONNECTING PLATE	1
95	200077	SCREW M6x12L & S.W. & W.	2
96	304629	SPACER, ANTI-SQUEAK	1

Advanced Infrared Eye - Optional

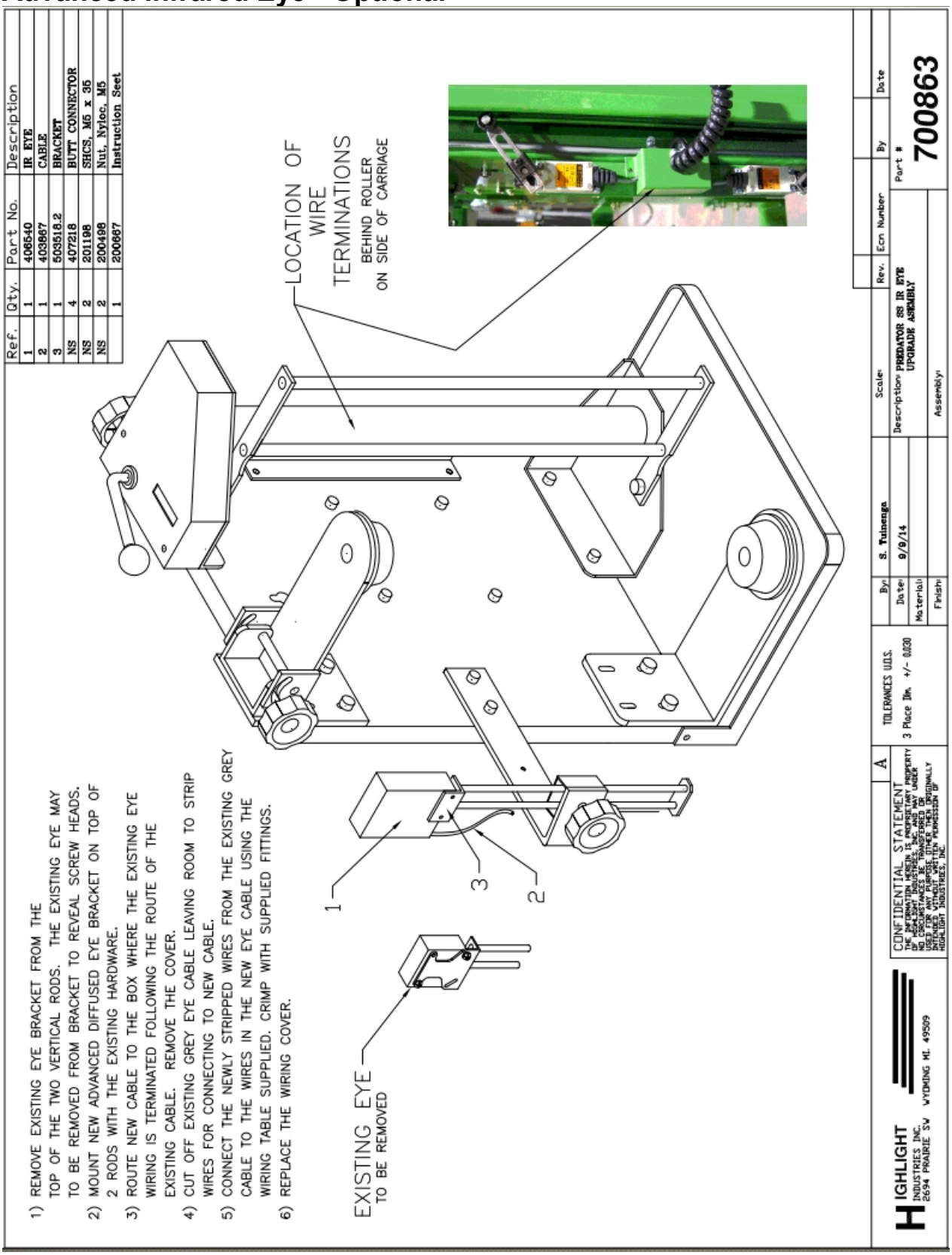

8

Notes