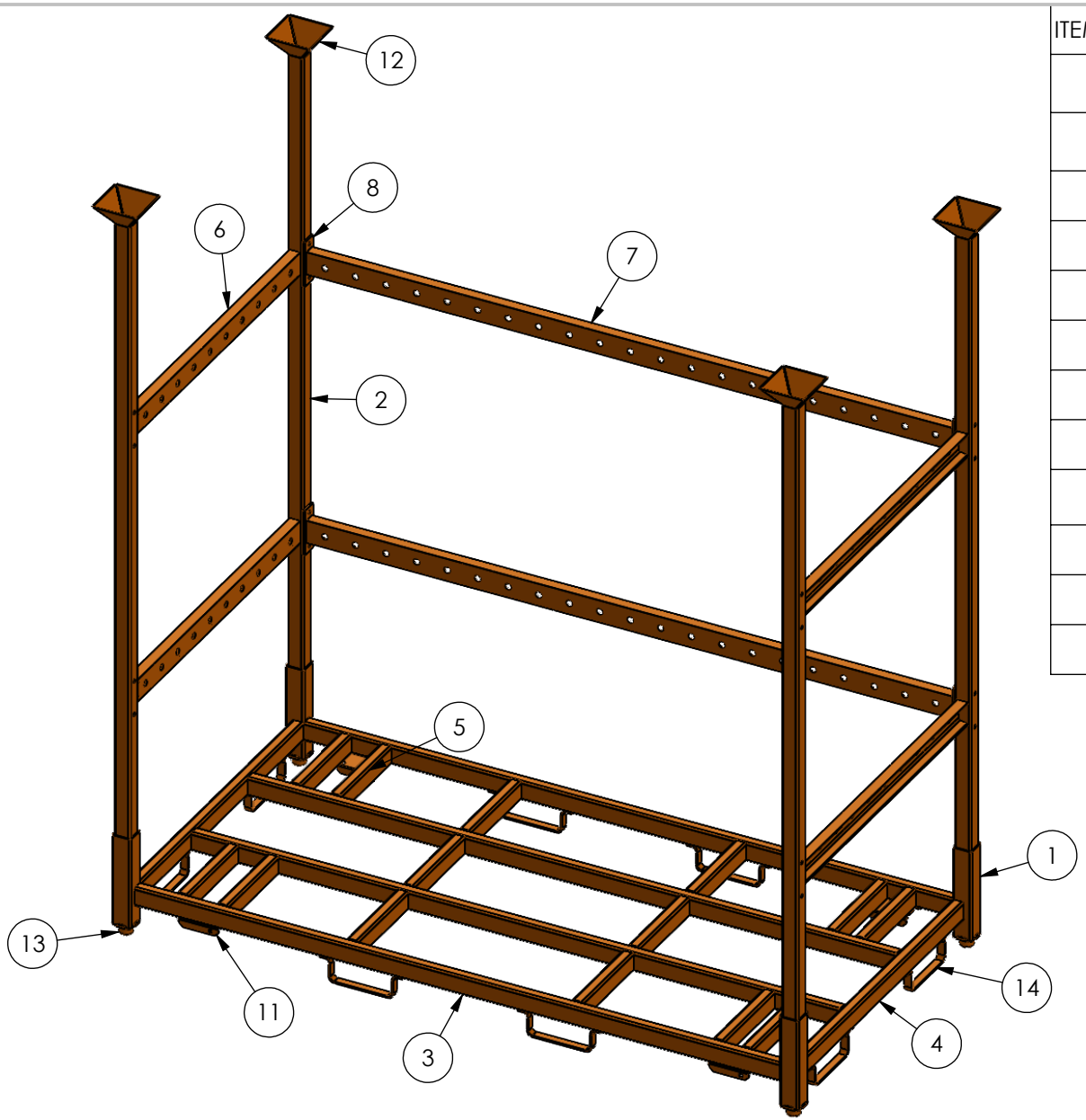

ITEM NO.	PART NUMBER	DESCRIPTION	QTY.
1	2.5 x 2.5 x 10GA x 12	Square Tube	4
2	2.125 x 2.125 x 14GA x 94.5---Holes	Square Tube---Lasered	4
3	2.5 x 1.5 x 14GA x 85	Rectangular Tube	4
4	2.5 x 1.5 x 14GA x 40.5	Rectangular Tube	2
5	2.5 x 1.5 x 14GA x 12.5	Rectangular Tube	14
6	Channel 3 x 4.1 x 40.875	Channel---Lasered	4
7	Channel 3 x 4.1 x 84.875	Channel---Lasered	2
8	2 x .25 x 6	Flat Bar---Lasered	4
11	Everest CP-03 Caster Pad	CASTER PAD - EVEREST #CP-03	4
12	6 x 6 x 12GA--#2409	Square Target	4
13	ZE-101-S	Plug	4
14	FS-2	Fork Stirrup	8

CAPACITY: 2500 LBS

Stackable: 4 High

(CAPACITIES ARE BASED ON EVENLY DISTRIBUTED LOADS)
(1. 6 SAFETY FACTOR)

P.O.C:	ORANGE
BASE:	91 LBS
POSTS:	135 LBS / Set
TOTAL E.W:	348 LBS

PERMITTING FOR PORTABLE RACKING IS THE RESPONSIBILITY OF THE CUSTOMER IN THE CUSTOMERS JURISDICTION. THESE UNITS ARE MOBILE STORAGE BINS WITH NO ANCHOR SYSTEM TO THE FLOOR. SAFTERY MEASURES TO ALWAYS BE TAKEN SINCE THESE UNITS ARE NOT FIXED.

REVISIONS:

CUSTOMER:

TITLE:
45.5" x 90" Steel Pallet
89.5" Clear Height

REV DATE:

DRAWN: TP

DATE: 9-29-2023

SCALE: 1:15

DRAWING NUMBER:
OR-3544

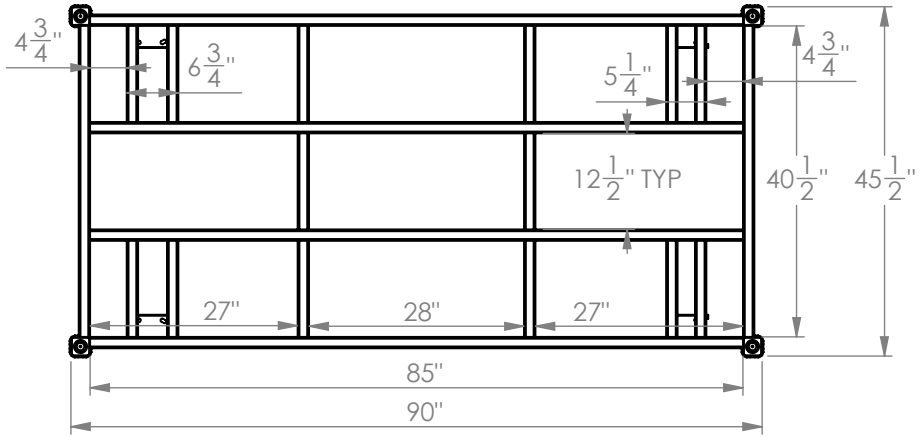

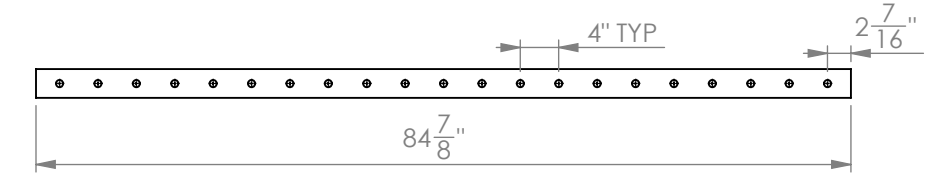

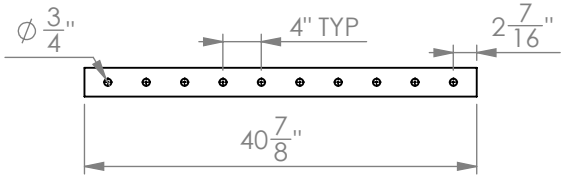

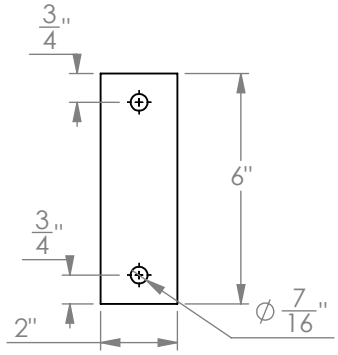

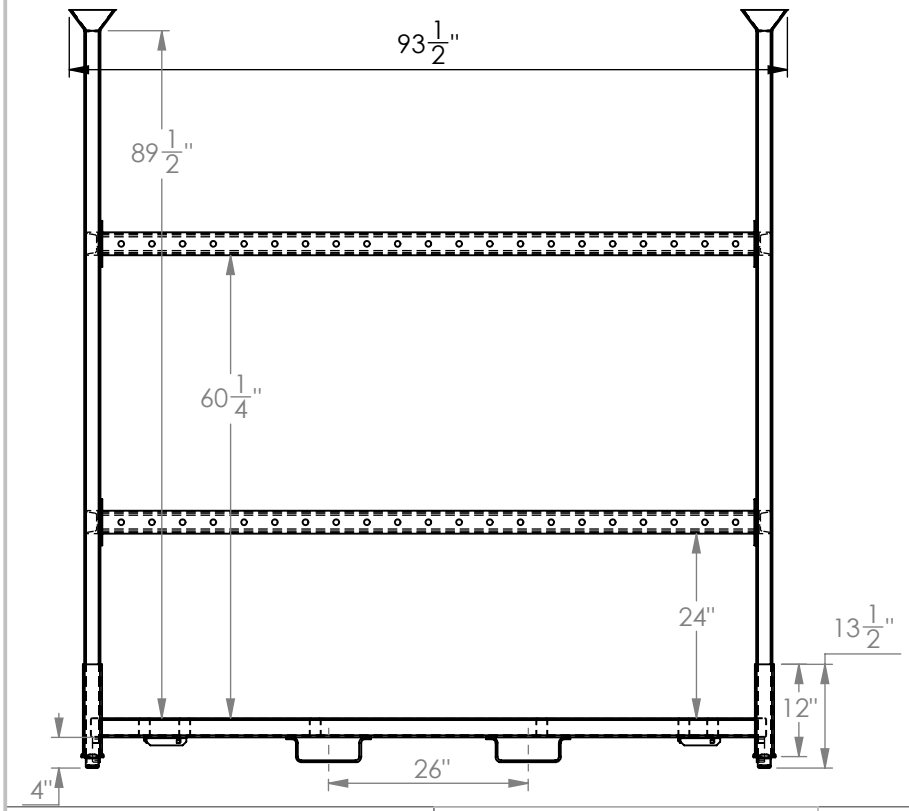

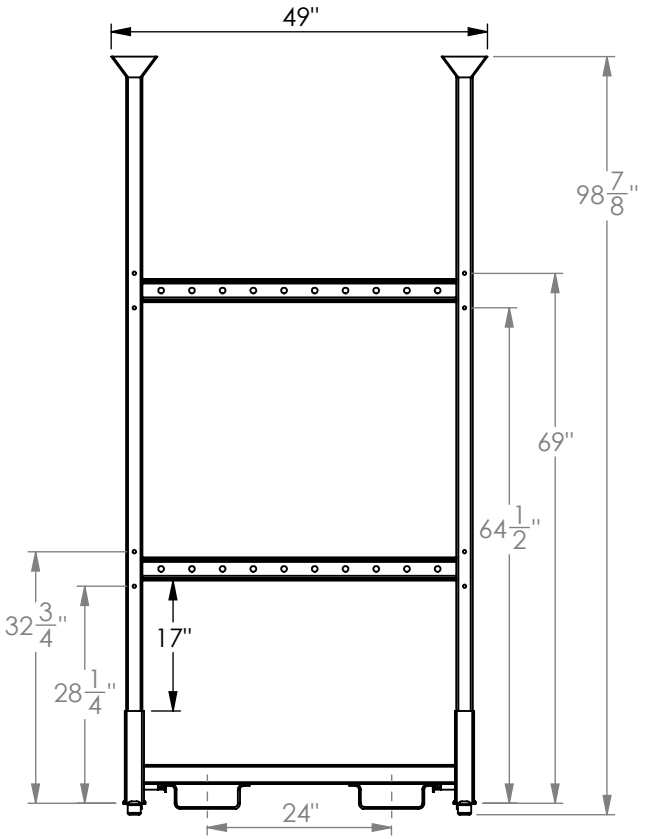

CAPACITY: 2500 LBS Stackable: 4 High (CAPACITIES ARE BASED ON EVENLY DISTRIBUTED LOADS) (1. 6 SAFETY FACTOR)	P.O.C: ORANGE BASE: 91 LBS POSTS: 135 LBS / Set TOTAL E.W: 348 LBS	REVISIONS:	CUSTOMER:	TITLE: 45.5" x 90" Steel Pallet 89.5" Clear Height
	PERMITTING FOR PORTABLE RACKING IS THE RESPONSIBILITY OF THE CUSTOMER IN THE CUSTOMERS JURISDICTION. THESE UNITS ARE MOBILE STORAGE BINS WITH NO ANCHOR SYSTEM TO THE FLOOR. SAFTERY MEASURES TO ALWAYS BE TAKEN SINCE THESE UNITS ARE NOT FIXED.	REV DATE: DATE: 9-29-2023	DRAWN: TP SCALE: 1:15	DRAWING NUMBER: OR-3544